3.3”/4.0” SQUARE FIXED DOWNLIGHT

TRIM

ⓘ THE IMAGES SHOWN ARE FOR ILLUSTRATION PURPOSES ONLY AND MAY NOT BE AN EXACT REPRESENTATION OF THE PRODUCT

INCLUDED COMPONENTS

RMD - REMODEL

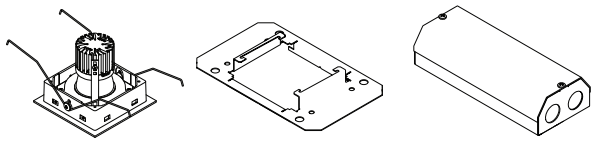

LED INSERT | CEILING PLATE | DRIVER ENCLOSURE

NCF - NEW CONSTRUCTION FRAME (FOR NEW CONSTRUCTION ONLY)

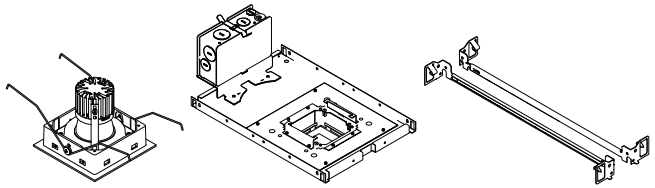

LED INSERT | NEW CONSTRUCTION FRAME | BAR HANGERS

SH - SHALLOW HOUSING (FOR NEW CONSTRUCTION ONLY)

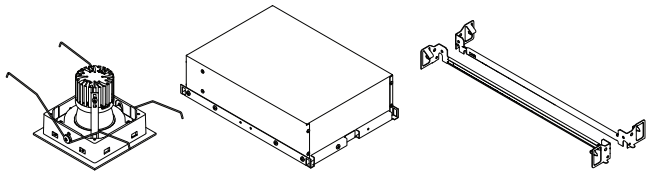

LED INSERT | SHALLOW HOUSING | BAR HANGERS

NC/IC - NEW CONSTRUCTION HOUSING (FOR NEW CONSTRUCTION ONLY)

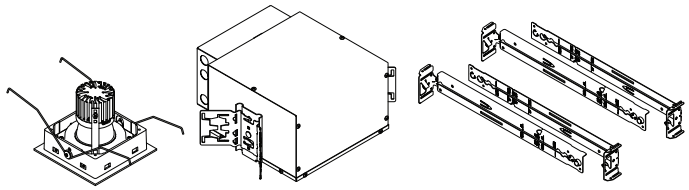

LED INSERT | NEW CONSTRUCTION HOUSING | BAR HANGERS (OPTIONAL)

INSTRUCTION KEY	INFORMATION
⚠ ADDITIONAL ⓘ ATTENTION POWER ON POWER OFF	INSTALLATION SHOULD ONLY BE PERFORMED BY A CERTIFIED ELECTRICIAN REFER TO LOCAL/NATIONAL CODES FOR PROPER INSTALLATION FAILURE TO FOLLOW INSTALLATION INSTRUCTION MAY VOID THE WARRANTY DO NOT TOUCH LEDS. LEDS MUST BE PROTECTED FROM MECHANICAL STRESS OR DEBRIS TURN OFF POWER DURING INSTALLATION OR SERVICING

3G LIGHTING

3.3”/4.0” SQUARE FIXED DOWNLIGHT
TRIM

INSTALLATION INSTRUCTIONS

RMD - REMODEL

1

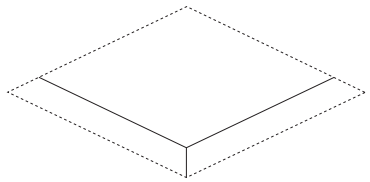

FIXTURE TYPE	CEILING HOLE SIZE
DL33SF	3.9375” x 3.9375”
DL40SF	4.6875” x 4.6875”

2

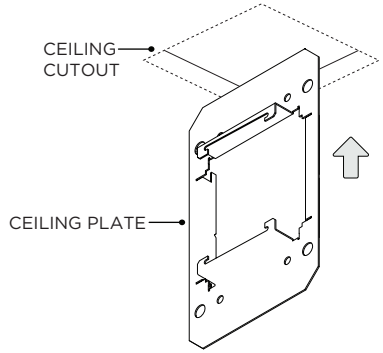

3

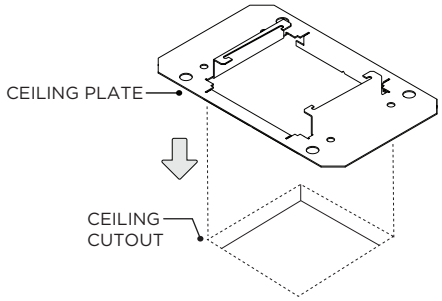

4

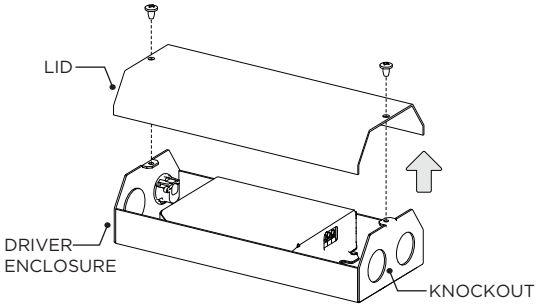

REMOVE LID AND KNOCKOUT FROM DRIVER ENCLOSURE

5

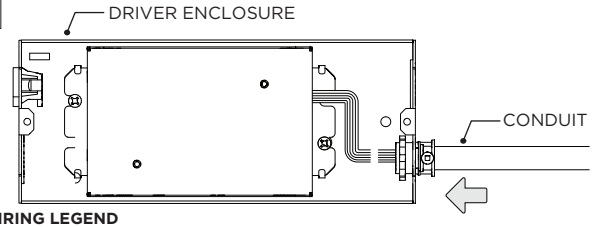

WIRING LEGEND

BLACK	HOT/LINE
WHITE	NEUTRAL
GREEN	GROUND
ORANGE	(DIM-)
PURPLE	(DIM+)

CONNECT CONDUIT TO DRIVER ENCLOSURE AND MAKE WIRING CONNECTIONS

6

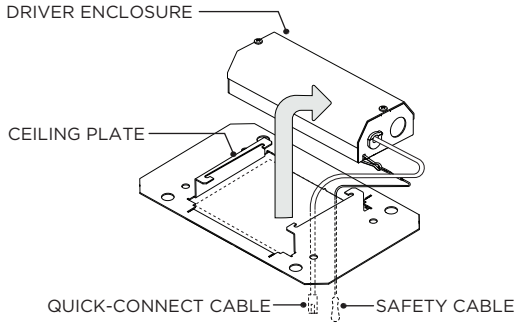

SECURE LID ONTO DRIVER ENCLOSURE AND PLACE ABOVE CEILING

7

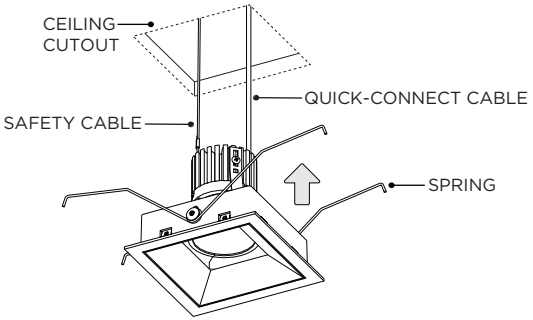

INSERT LED ASSEMBLY INTO CEILING

7A

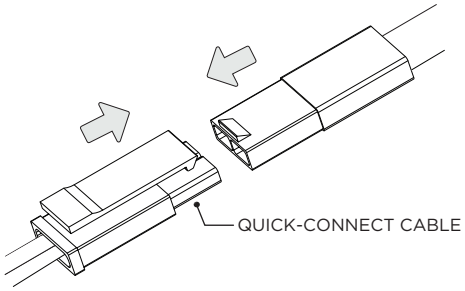

CONNECT SAFETY CABLE & QUICK-CONNECT CABLE TO LED ASSEMBLY

7B

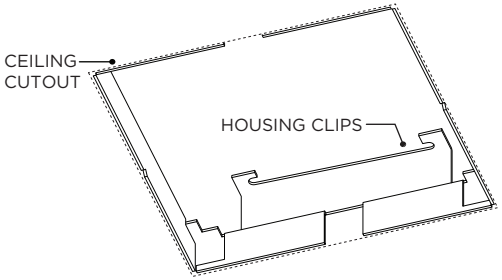

ENGAGE SPRINGS TO HOUSING CLIPS TO SECURE LED INSERT INTO CEILING

RMD - REMODEL WITH REMOTE DRIVER ENCLOSURE

1 REMOTE DRIVER WIRING

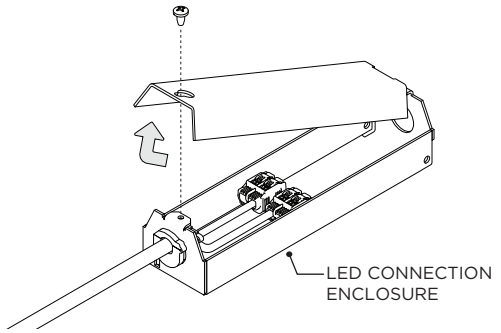

FOR REMOTE EMR DRIVER BOX, MAKE WIRED CONNECTIONS INSIDE PROVIDED LED CONNECTION ENCLOSURE

2

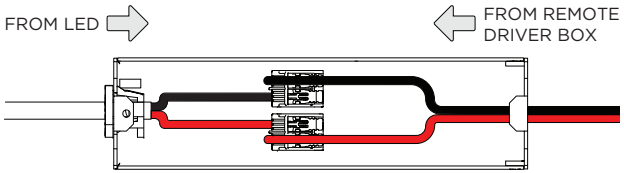

MAKE WIRING CONNECTIONS

NCF - NEW CONSTRUCTION FRAME (FOR NEW CONSTRUCTION ONLY)

1

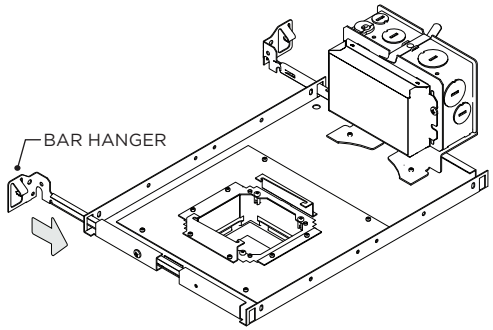

1A

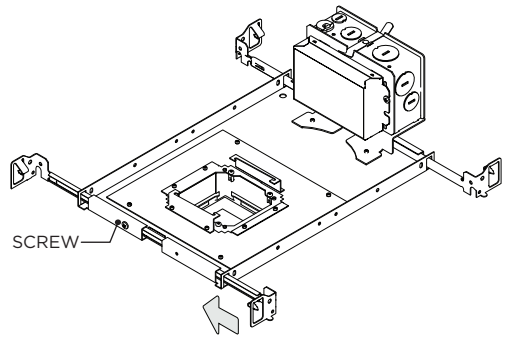

SECURE BAR HANGERS IN PLACE WITH SCREW

2

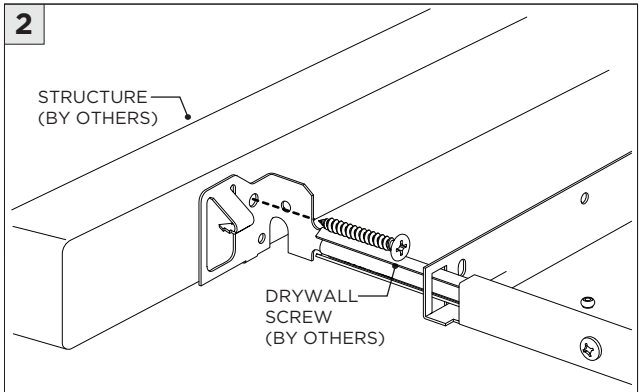

BAR HANGERS HAVE 14” to 26” EXTENSION

3

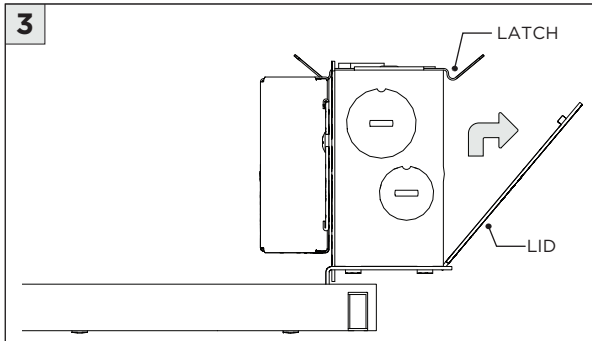

REMOVE ELECTRICAL BOX LID TO ACCESS WIRING

4

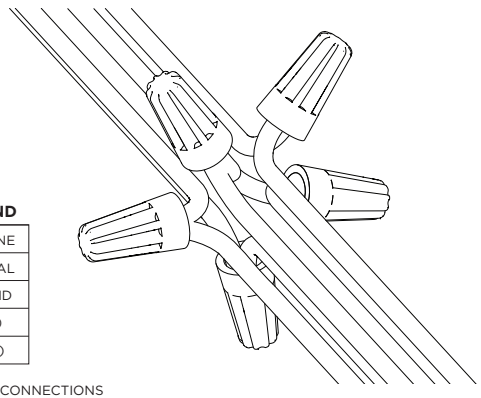

WIRING LEGEND

BLACK	HOT/LINE
WHITE	NEUTRAL
GREEN	GROUND
ORANGE	(DIM-)
PURPLE	(DIM+)

MAKE WIRING CONNECTIONS

5 FOR INTEGRATED BATTERY ONLY

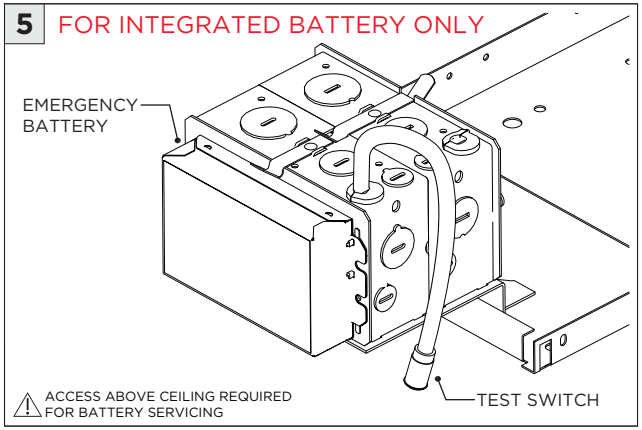

ACCESS ABOVE CEILING REQUIRED FOR BATTERY SERVICING

6

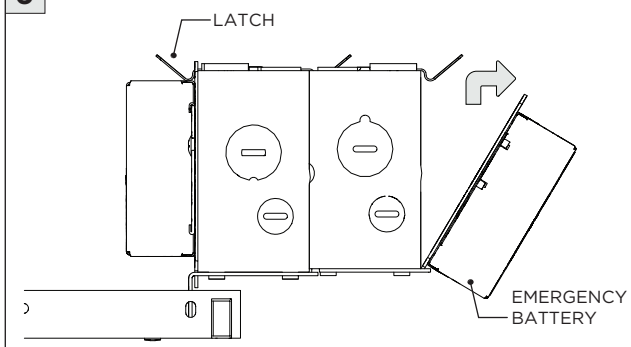

REMOVE BATTERY BOX COVER TO ACCESS WIRING

7

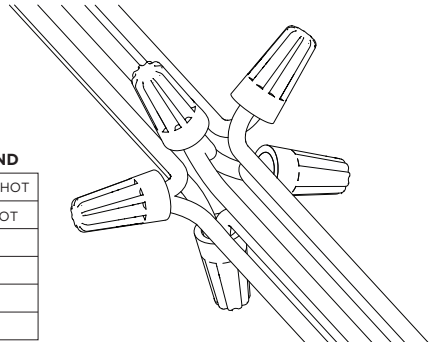

EMB WIRING LEGEND

RED	UNSWITCHED HOT
BLACK	SWITCHED HOT
WHITE	NEUTRAL
GREEN	GROUND
ORANGE	(DIM-)
PURPLE	(DIM+)

MAKE WIRING CONNECTIONS

8

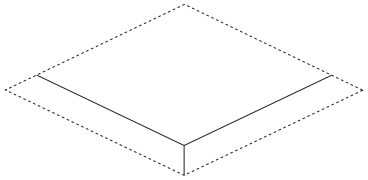

FIXTURE TYPE	CEILING HOLE SIZE
DL33SF	3.9375” x 3.9375”
DL40SF	4.6875” x 4.6875”

INSTALL CEILING BELOW FIXTURE

9

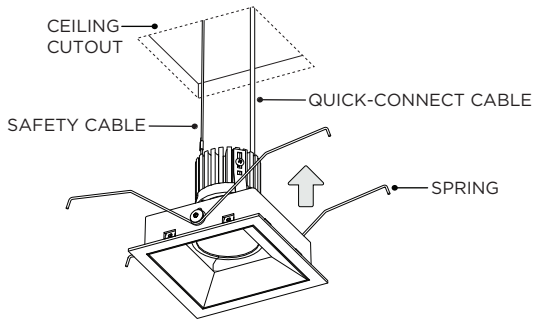

INSERT LED ASSEMBLY INTO CEILING

9A

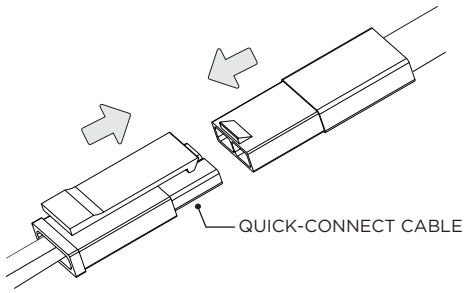

CONNECT SAFETY CABLE & QUICK-CONNECT CABLE TO LED ASSEMBLY

9B

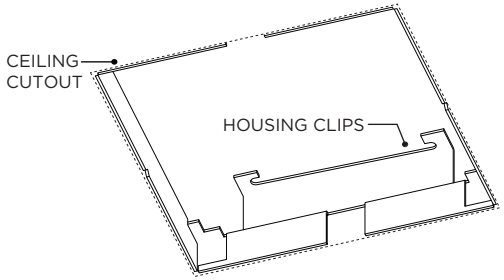

ENGAGE SPRINGS TO HOUSING CLIPS TO SECURE LED INSERT INTO CEILING

NC/IC - NEW CONSTRUCTION HOUSING (FOR NEW CONSTRUCTION ONLY)

1 BAR HANGER INSTALLATION
(IF SUPPLIED BY 3G)

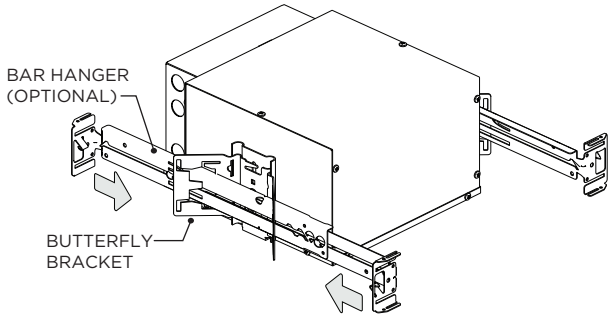

1A

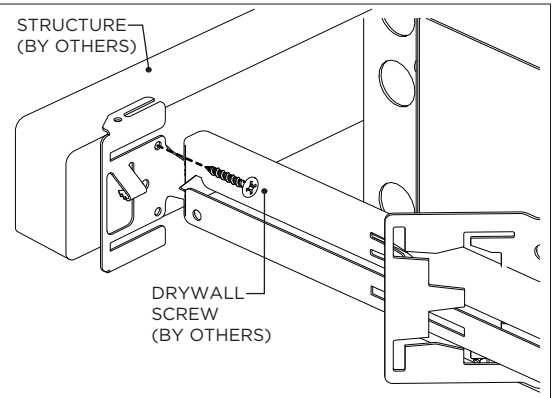

2 OTHER BAR HANGER INSTALLATION
(NOT PROVIDED BY 3G)

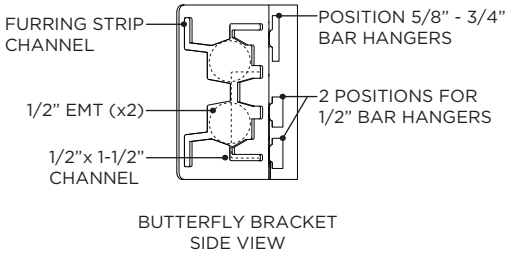

3

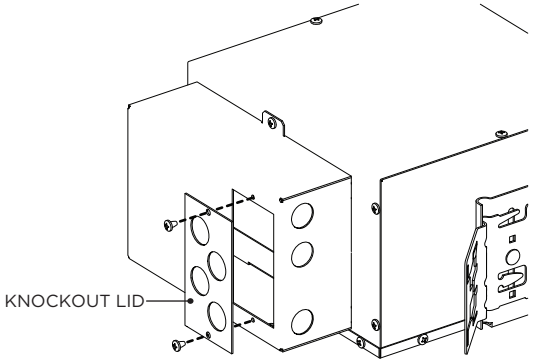

REMOVE ELECTRICAL BOX KNOCKOUT LID TO ACCESS WIRING

3A

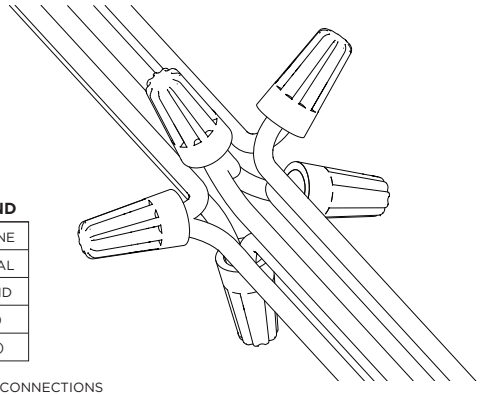

WIRING LEGEND

BLACK	HOT/LINE
WHITE	NEUTRAL
GREEN	GROUND
ORANGE	(DIM-)
PURPLE	(DIM+)

MAKE WIRING CONNECTIONS

4

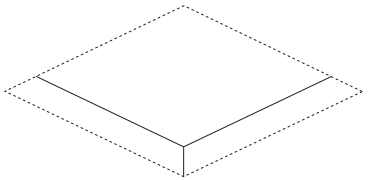

FIXTURE TYPE	CEILING HOLE SIZE
DL33SF	3.9375” x 3.9375”
DL40SF	4.6875” x 4.6875”

INSTALL CEILING BELOW FIXTURE

5

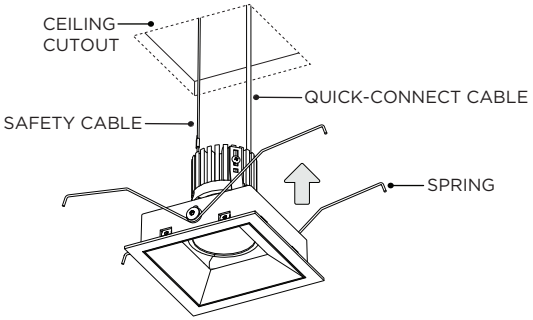

INSERT LED ASSEMBLY INTO CEILING

5A

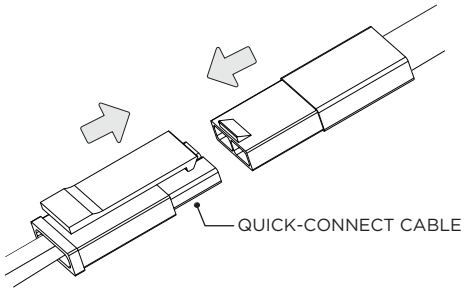

CONNECT SAFETY CABLE & QUICK-CONNECT CABLE TO LED ASSEMBLY

5B

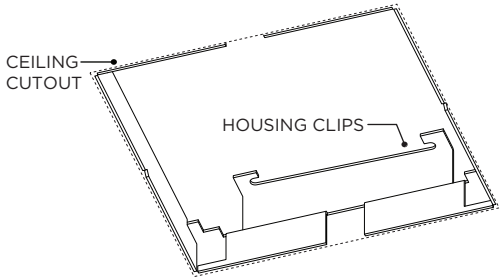

ENGAGE SPRINGS TO HOUSING CLIPS TO SECURE LED INSERT INTO CEILING

SH - SHALLOW HOUSING (FOR NEW CONSTRUCTION ONLY)

1

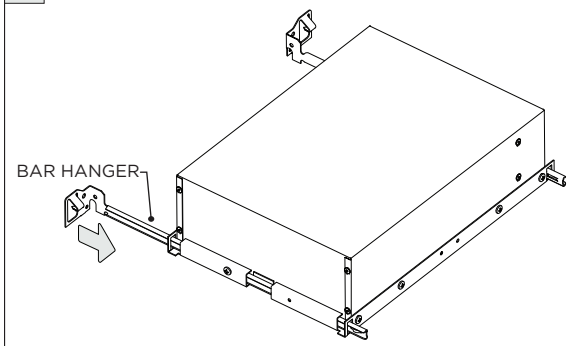

2

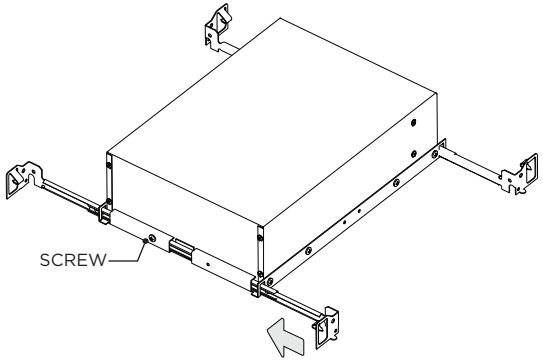

SECURE BAR HANGERS IN PLACE WITH SCREW

3

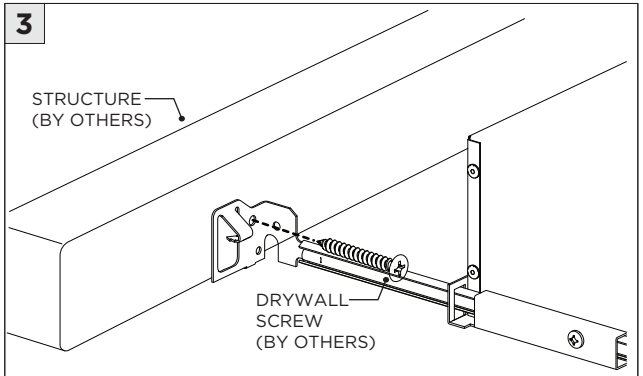

4

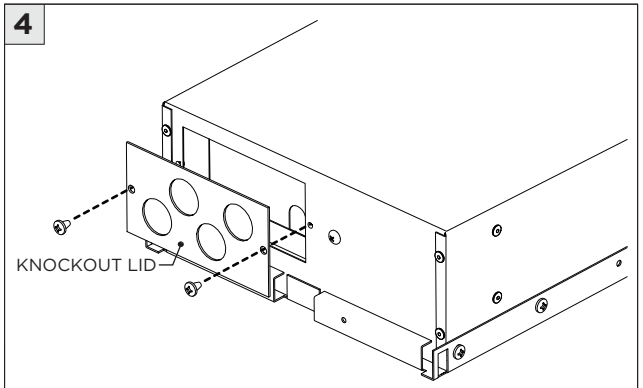

REMOVE ELECTRICAL BOX KNOCKOUT LID TO ACCESS WIRING

4A

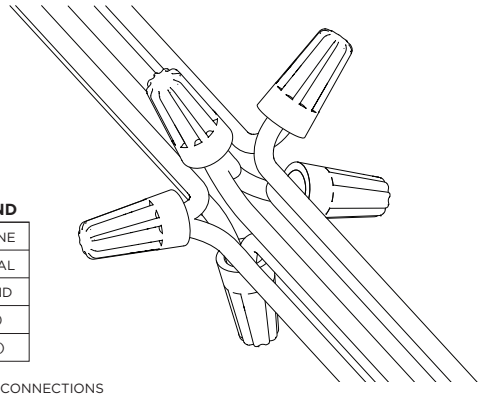

WIRING LEGEND

BLACK	HOT/LINE
WHITE	NEUTRAL
GREEN	GROUND
ORANGE	(DIM-)
PURPLE	(DIM+)

MAKE WIRING CONNECTIONS

5

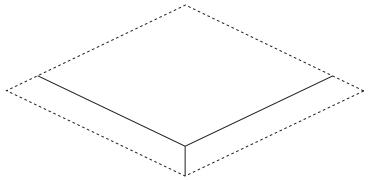

FIXTURE TYPE	CEILING HOLE SIZE
DL33SF	3.9375” x 3.9375”
DL40SF	4.6875” x 4.6875”

INSTALL CEILING BELOW FIXTURE

6

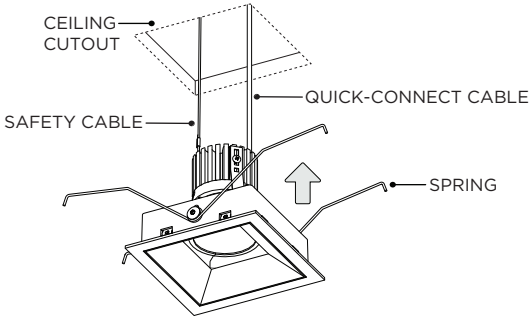

INSERT LED ASSEMBLY INTO CEILING

6A

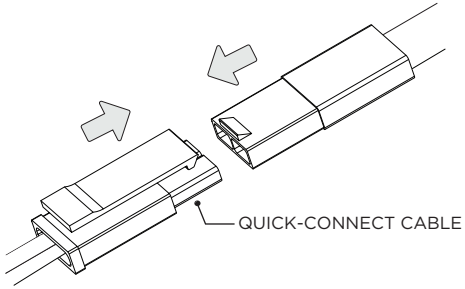

CONNECT SAFETY CABLE & QUICK-CONNECT CABLE TO LED ASSEMBLY

6B

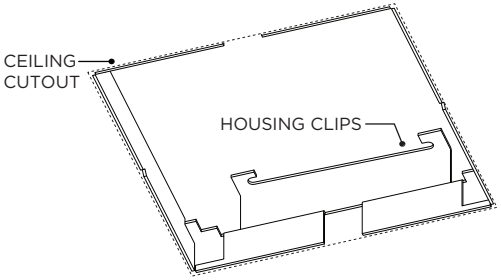

ENGAGE SPRINGS TO HOUSING CLIPS TO SECURE LED INSERT INTO CEILING

DRIVER SERVICING

1 **RMD -** REMODEL

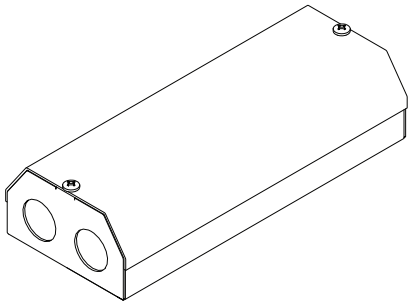

DISCONNECT POWER BEFORE SERVICING

2

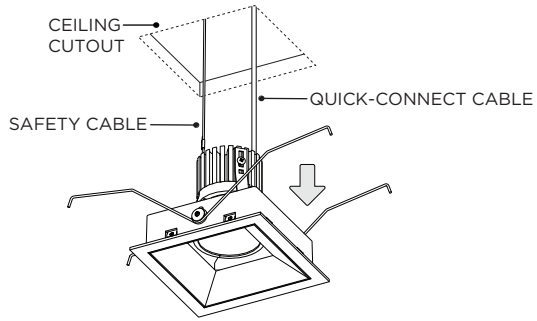

REMOVE LED ASSEMBLY FROM CEILING

2A

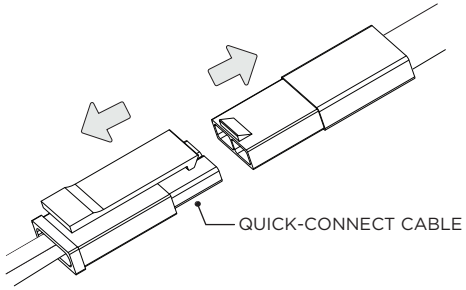

DISCONNECT SAFETY CABLE & QUICK-CONNECT CABLE FROM LED ASSEMBLY

3

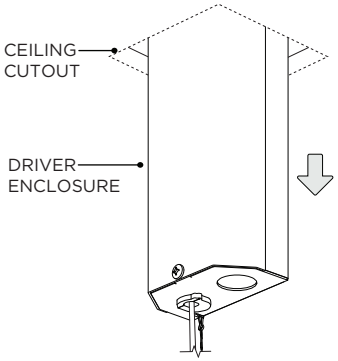

4

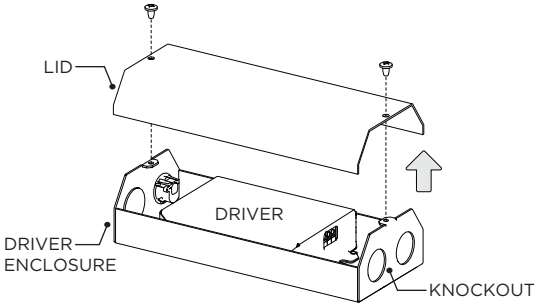

DRIVER SERVICING

1 **NCF -** NEW CONSTRUCTION FRAME

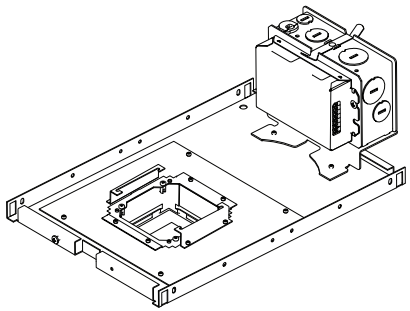

DISCONNECT POWER BEFORE SERVICING

2

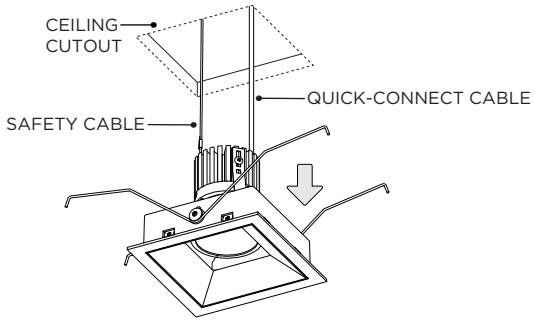

REMOVE LED ASSEMBLY FROM CEILING

2A

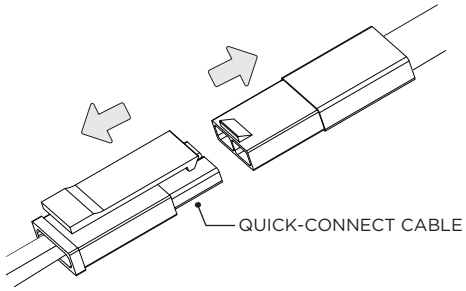

DISCONNECT SAFETY CABLE & QUICK-CONNECT CABLE FROM LED ASSEMBLY

3

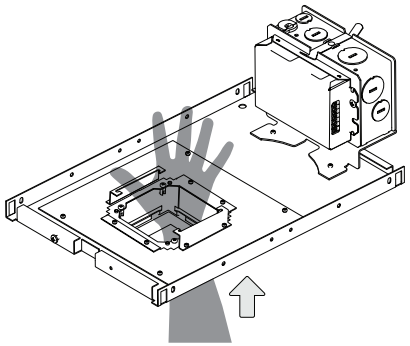

4

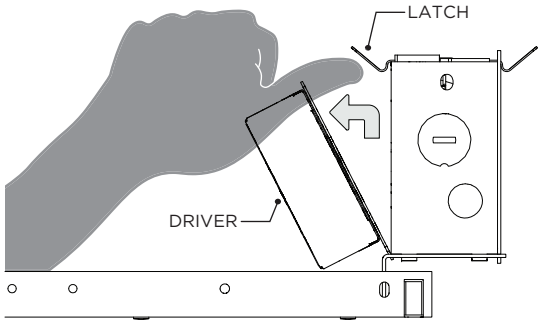

5

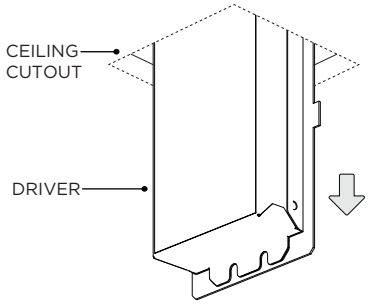

5A

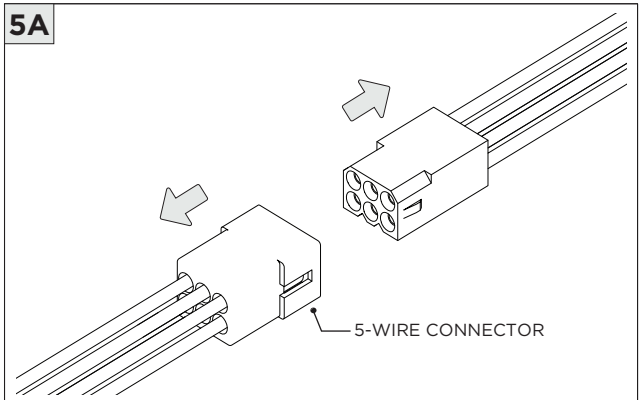

DISCONNECT 5-WIRE CONNECTOR

6 **NCF -** NEW CONSTRUCTION FRAME FOR INTEGRATED BATTERY ONLY

THIS UNIT UTILIZES MORE THAN ONE POWER SOURCE
DISCONNECT ALL POWER SOURCES BEFORE SERVICING

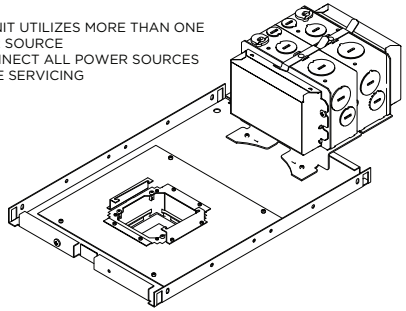

ACCESS ABOVE CEILING REQUIRED FOR DRIVER SERVICING

7

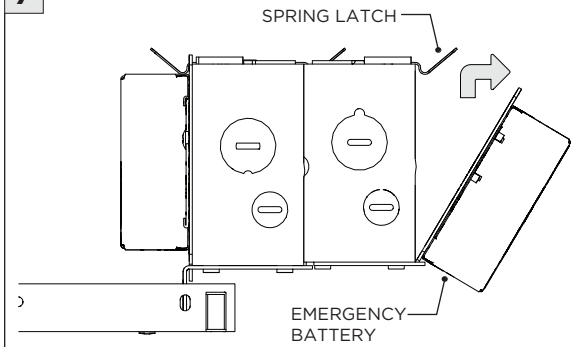

REMOVE BATTERY BOX COVER TO ACCESS WIRING

DRIVER SERVICING

1 **SH -** SHALLOW HOUSING

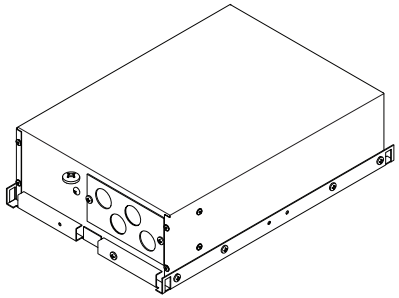

DISCONNECT POWER BEFORE SERVICING

2

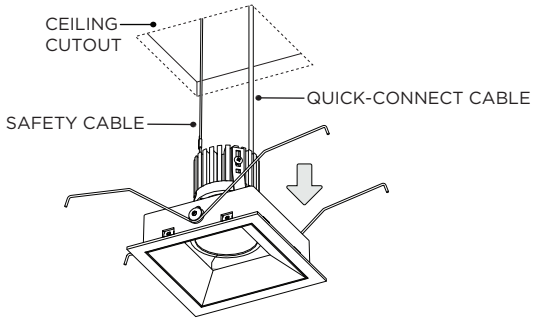

REMOVE LED ASSEMBLY FROM CEILING

2A

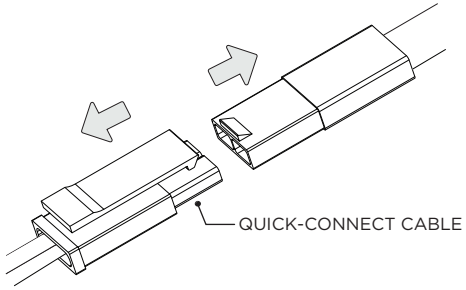

DISCONNECT SAFETY CABLE & QUICK-CONNECT CABLE FROM LED ASSEMBLY

3

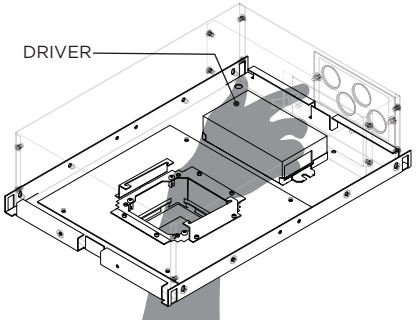

REMOVE DRIVER - SECURED WITH HOOK-AND-LOOP FASTENER

4

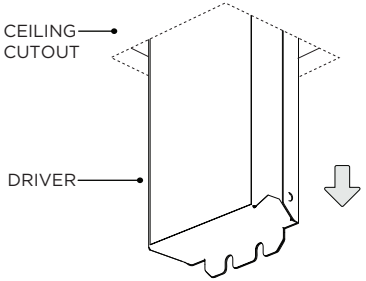

4A

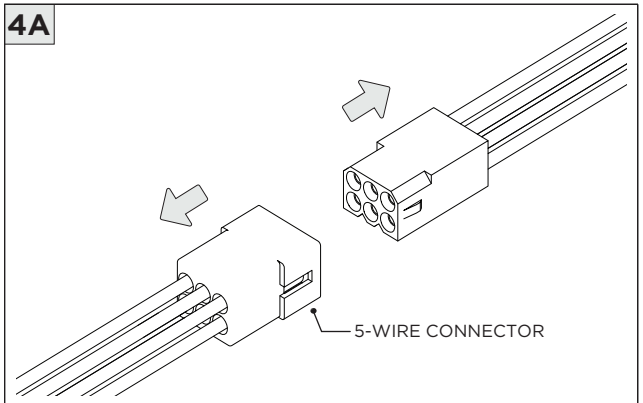

DISCONNECT 5-WIRE CONNECTOR

LED SERVICING

1

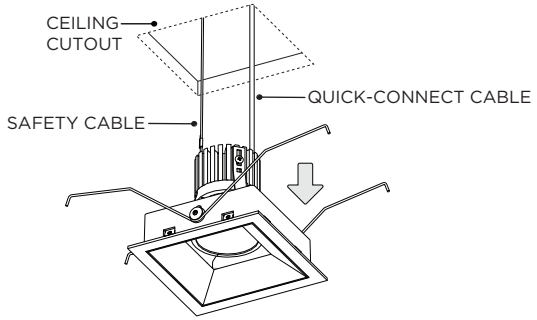

REMOVE LED ASSEMBLY FROM CEILING

2

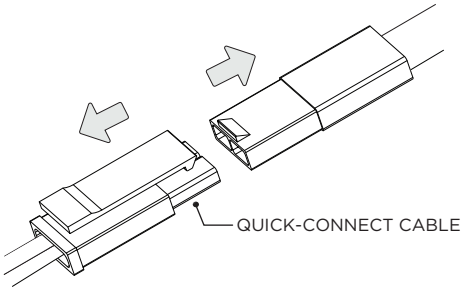

DISCONNECT SAFETY CABLE & QUICK-CONNECT CABLE FROM LED ASSEMBLY

3 FOR **DL33/DL40**

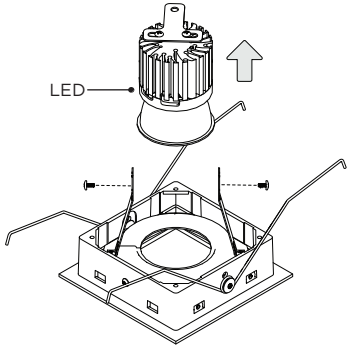

DRIVER SERVICING

1 **NC/IC -** NEW CONSTRUCTION HOUSING

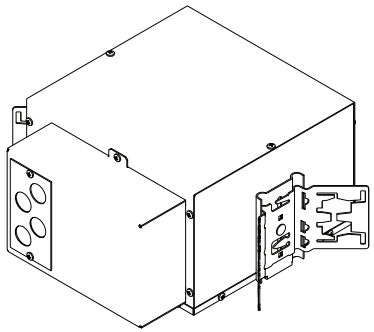

DISCONNECT POWER BEFORE SERVICING

2

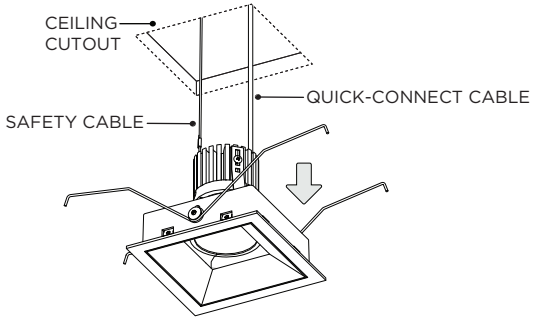

REMOVE LED ASSEMBLY FROM CEILING

2A

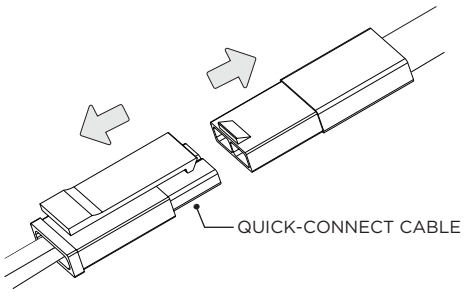

DISCONNECT SAFETY CABLE & QUICK-CONNECT CABLE FROM LED ASSEMBLY

3

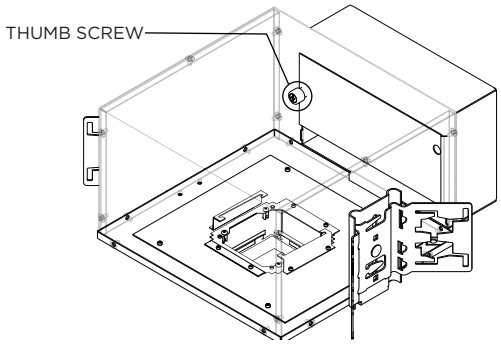

4

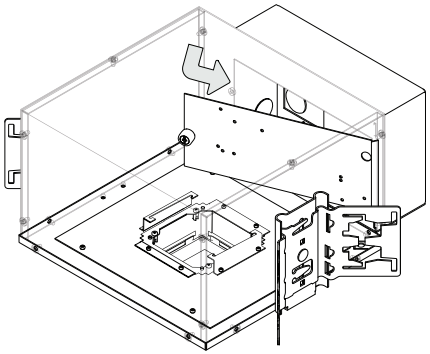

5

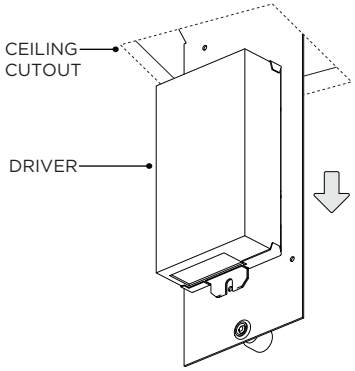

5A

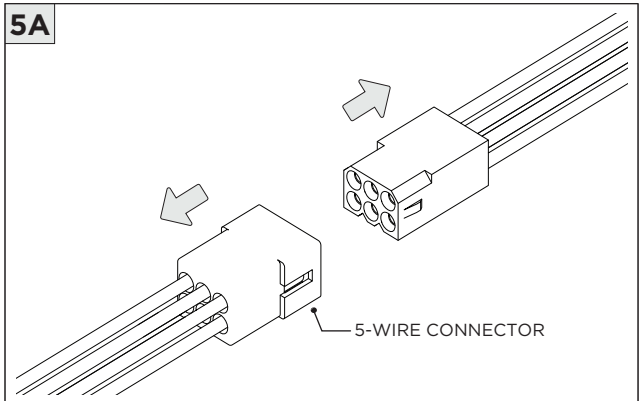

DISCONNECT 5-WIRE CONNECTOR