# 2” ROUND FIXED DOWNLIGHT

TRIMLESS

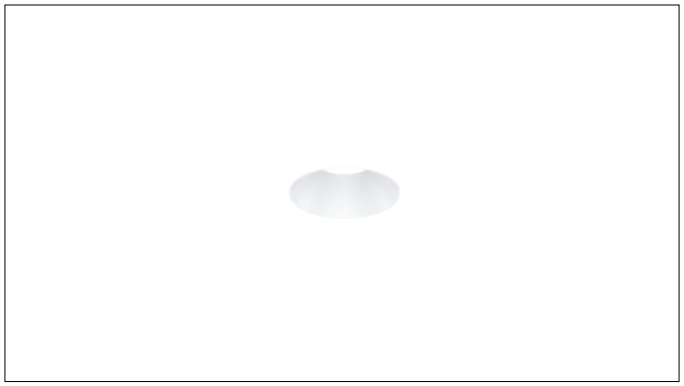

ⓘ THE IMAGES SHOWN ARE FOR ILLUSTRATION PURPOSES ONLY AND MAY NOT BE AN EXACT REPRESENTATION OF THE PRODUCT

## INCLUDED COMPONENTS

### **NCF -** NEW CONSTRUCTION FRAME (FOR NEW CONSTRUCTION ONLY)

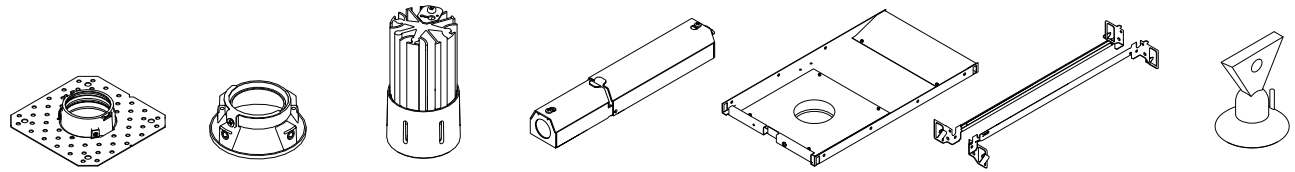

MUDDING FLANGE | BEVELED INSERT | LED ASSEMBLY | DRIVER ENCLOSURE | NEW CONSTRUCTION FRAME | BAR HANGERS | SUCTION CUP

### **NC -** NEW CONSTRUCTION HOUSING (FOR NEW CONSTRUCTION ONLY)

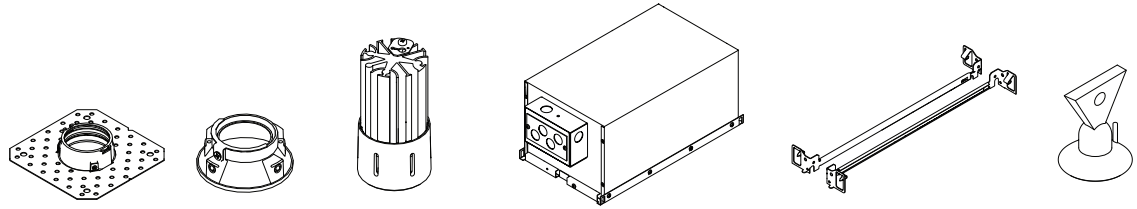

MUDDING FLANGE | BEVELED INSERT | LED ASSEMBLY | NEW CONSTRUCTION HOUSING | BAR HANGERS | SUCTION CUP

### **RMD -** REMODEL

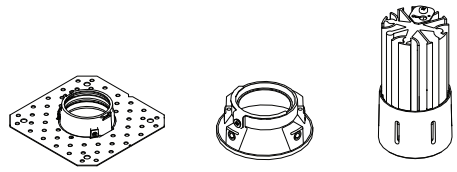

MUDDING FLANGE | BEVELED INSERT | LED ASSEMBLY

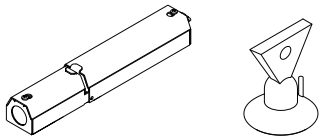

DRIVER ENCLOSURE | SUCTION CUP

| INSTRUCTION KEY | INFORMATION |
|---|---|
| ⚠ ADDITIONAL | INSTALLATION SHOULD ONLY BE PERFORMED BY A CERTIFIED ELECTRICIAN |
| ⓘ ATTENTION | REFER TO LOCAL/NATIONAL CODES FOR PROPER INSTALLATION |
| POWER ON | FAILURE TO FOLLOW INSTALLATION INSTRUCTION MAY VOID THE WARRANTY |
| POWER OFF | DO NOT TOUCH LEDS. LEDS MUST BE PROTECTED FROM MECHANICAL STRESS OR DEBRIS |
| | TURN OFF POWER DURING INSTALLATION OR SERVICING |

3G LIGHTING

**2" ROUND FIXED DOWNLIGHT**
TRIMLESS

**INSTALLATION INSTRUCTIONS**

## **RMD -** REMODEL

### 1

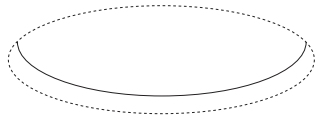

| FIXTURE TYPE | CEILING HOLE SIZE |
|---|---|
| DL20RF | ⌀2.625" |

### 2

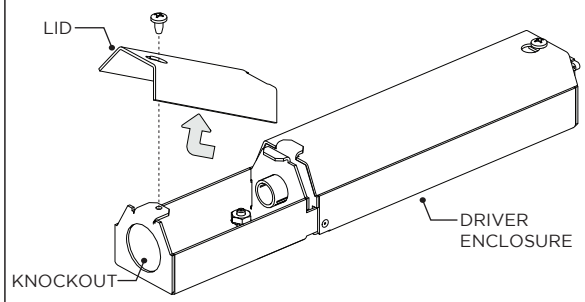


REMOVE LID AND KNOCKOUT FROM DRIVER ENCLOSURE

### 3

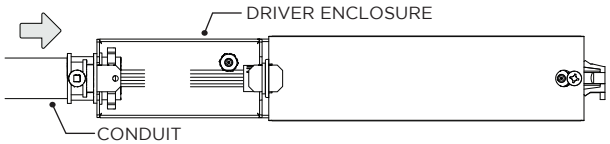


**WIRING LEGEND**

| | |
|---|---|
| BLACK | HOT/LINE |
| WHITE | NEUTRAL |
| GREEN | GROUND |
| ORANGE | (DIM-) |
| PURPLE | (DIM+) |

CONNECT CONDUIT TO DRIVER ENCLOSURE AND MAKE WIRING CONNECTIONS

### 4

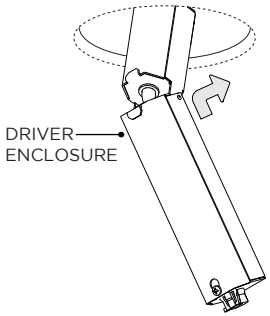


SECURE LID ONTO DRIVER ENCLOSURE AND INSERT INTO CEILING

### 5

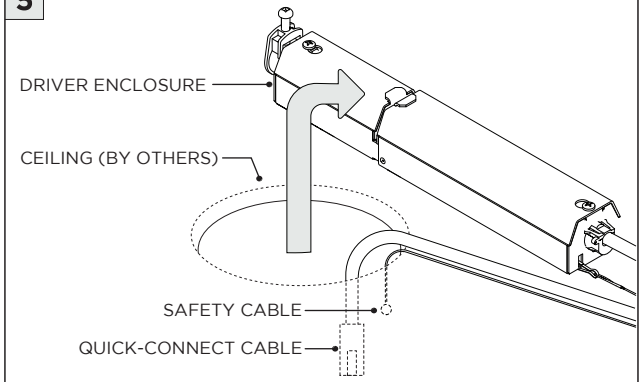


PLACE DRIVER ENCLOSURE ABOVE CEILING

### 6A

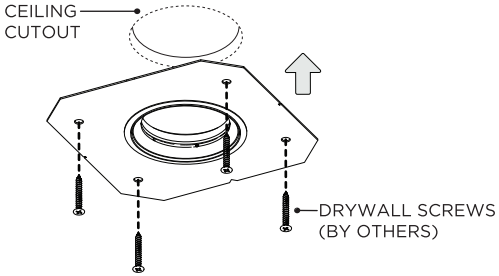


SECURE MUDDING FLANGE TO CEILING

### 6B

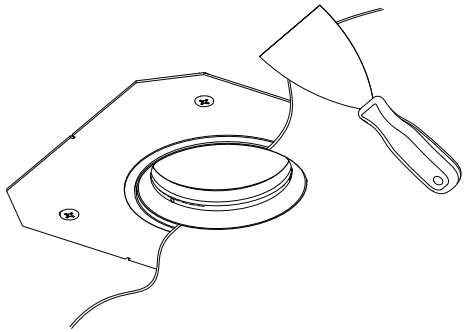

APPLY MUDDING COMPOUND (BY OTHERS) TO CEILING

### 7A

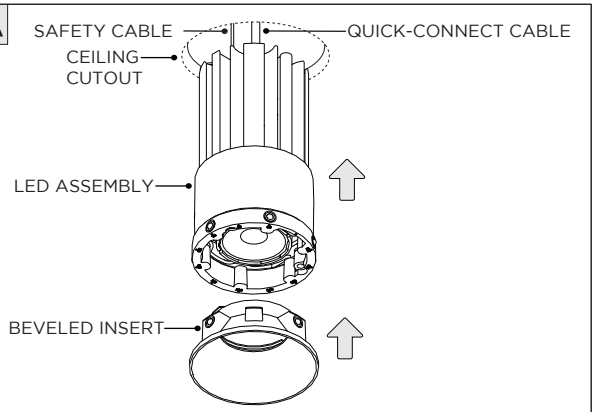


### 7B

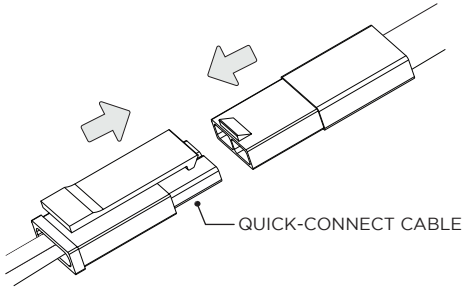


CONNECT SAFETY CABLE & QUICK-CONNECT CABLE TO LED ASSEMBLY

## **RMD -** REMODEL WITH REMOTE DRIVER ENCLOSURE

**1** REMOTE DRIVER WIRING

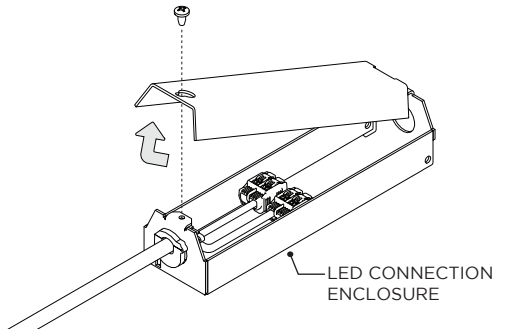


FOR REMOTE EMR DRIVER BOX, MAKE WIRED CONNECTIONS INSIDE PROVIDED LED CONNECTION ENCLOSURE

**2**

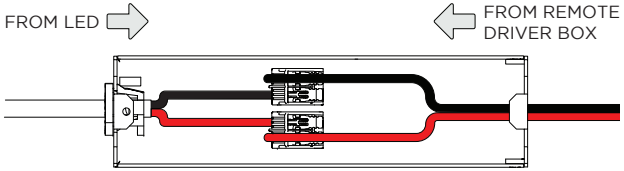


MAKE WIRING CONNECTIONS

## **NCF -** NEW CONSTRUCTION FRAME (FOR NEW CONSTRUCTION ONLY)

### 1

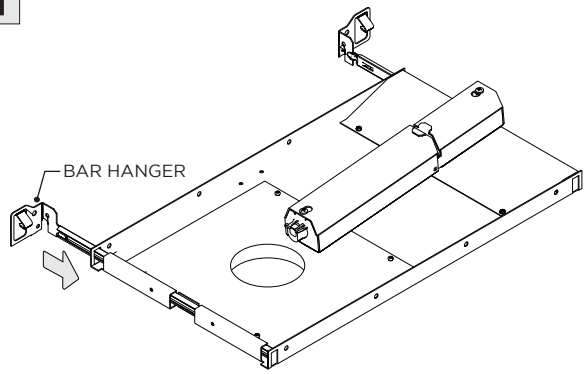


### 1A

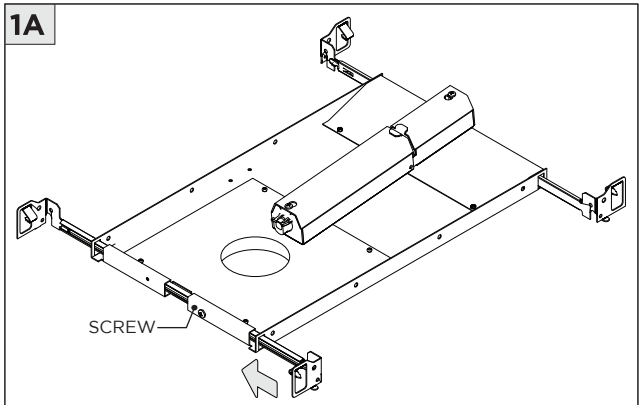


SECURE BAR HANGERS IN PLACE WITH SCREW

### 2

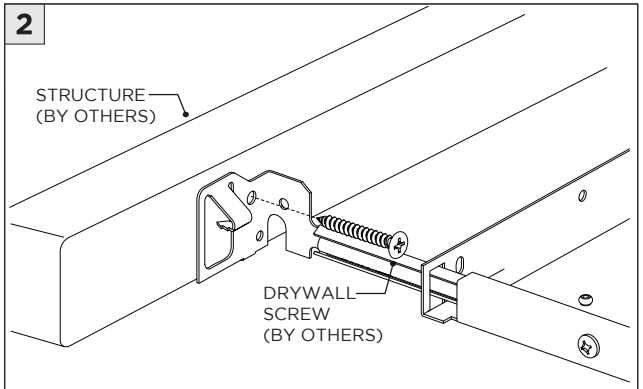


BAR HANGERS HAVE 14" to 26" EXTENSION

### 3

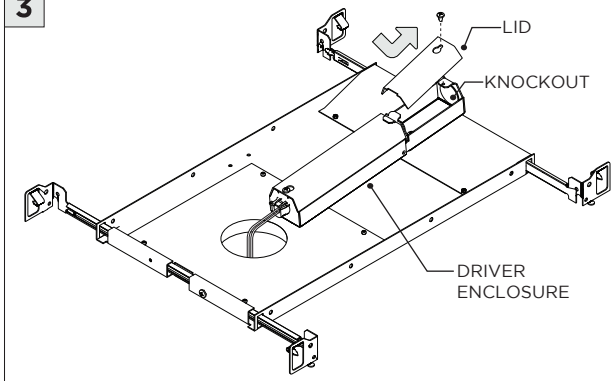


REMOVE LID AND KNOCKOUT FROM DRIVER ENCLOSURE

### 4

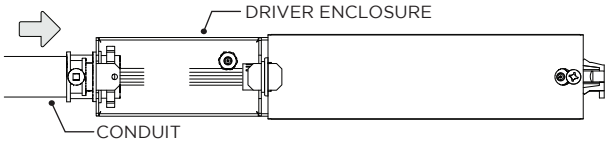


**WIRING LEGEND**

| | |
|---|---|
| BLACK | HOT/LINE |
| WHITE | NEUTRAL |
| GREEN | GROUND |
| ORANGE | (DIM-) |
| PURPLE | (DIM+) |

CONNECT CONDUIT TO DRIVER ENCLOSURE AND MAKE WIRING CONNECTIONS

### 5

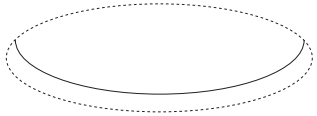

| FIXTURE TYPE | CEILING HOLE SIZE |
|---|---|
| **DL20RF** | ⦸2.625" |

INSTALL CEILING BELOW FIXTURE

### 6A

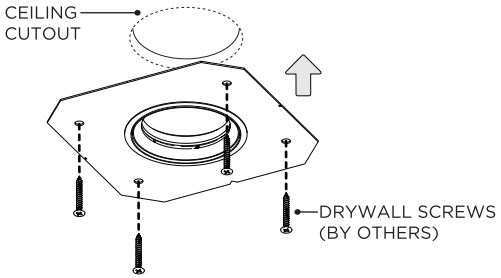


SECURE MUDDING FLANGE TO CEILING

### 6B

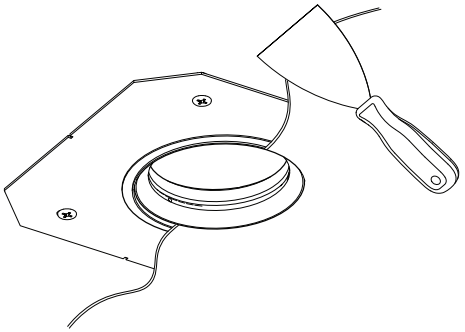

APPLY MUDDING COMPOUND (BY OTHERS) TO CEILING

### 6C

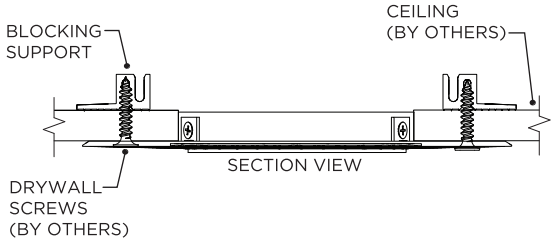

## **NCF -** NEW CONSTRUCTION FRAME (FOR NEW CONSTRUCTION ONLY)

**7A**

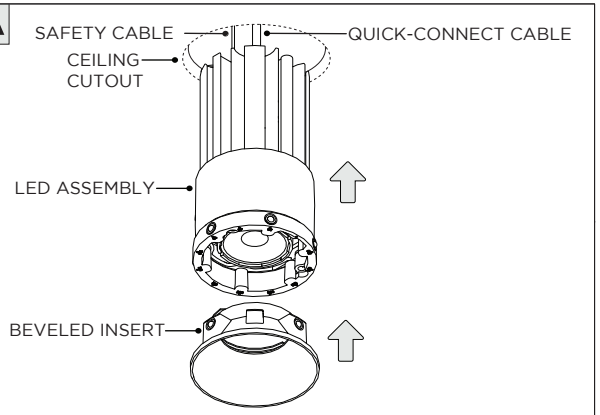


**7B**

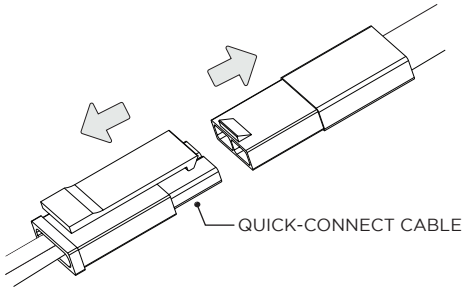


CONNECT SAFETY CABLE & QUICK-CONNECT CABLE TO LED ASSEMBLY

## **NC/IC -** NEW CONSTRUCTION HOUSING (FOR NEW CONSTRUCTION ONLY)

**1**

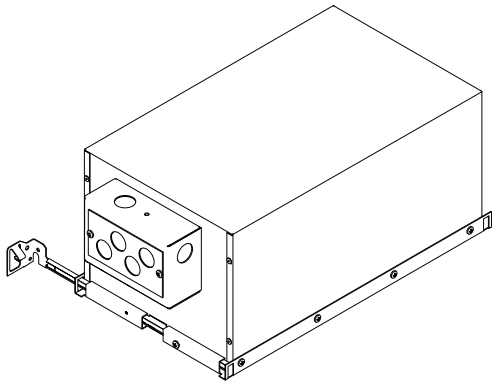

**1A**

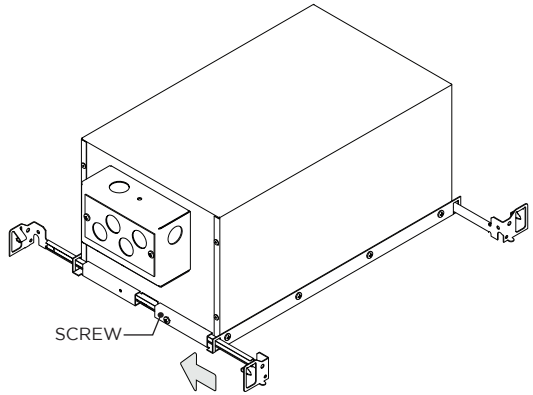


SECURE BAR HANGERS IN PLACE WITH SCREW

**2**

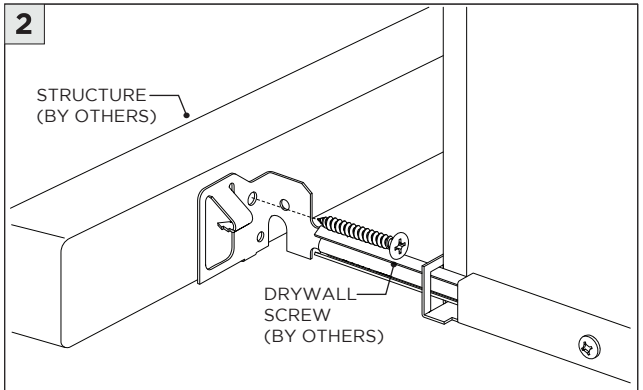


BAR HANGERS HAVE 14" to 26" EXTENSION

**3**

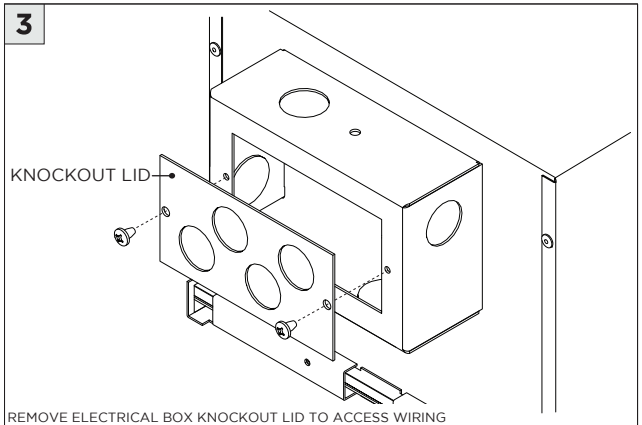


REMOVE ELECTRICAL BOX KNOCKOUT LID TO ACCESS WIRING

**3A**

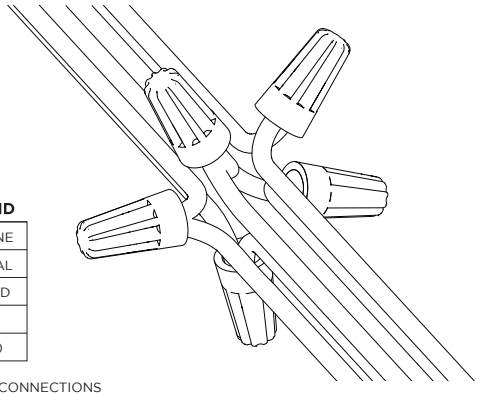

**WIRING LEGEND**

| | |
|---|---|
| BLACK | HOT/LINE |
| WHITE | NEUTRAL |
| GREEN | GROUND |
| ORANGE | (DIM-) |
| PURPLE | (DIM+) |

MAKE WIRING CONNECTIONS

**4**

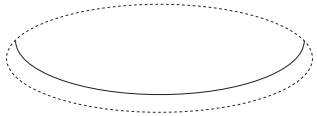

| FIXTURE TYPE | CEILING HOLE SIZE |
|---|---|
| DL20RF | ⌀2.625" |

INSTALL CEILING BELOW FIXTURE

**5A**

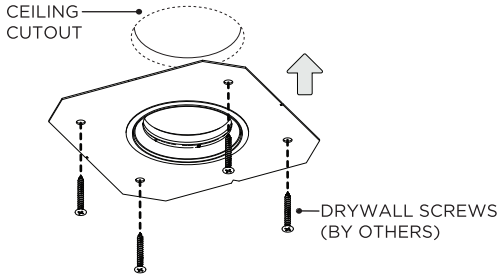


SECURE MUDDING FLANGE TO CEILING

**5B**

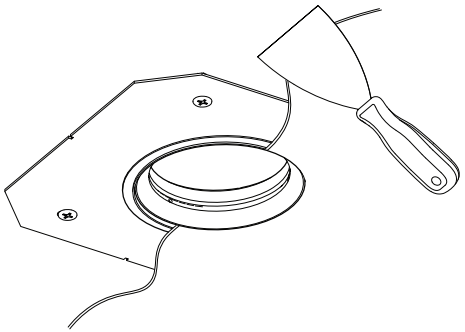

APPLY MUDDING COMPOUND (BY OTHERS) TO CEILING

**5C**

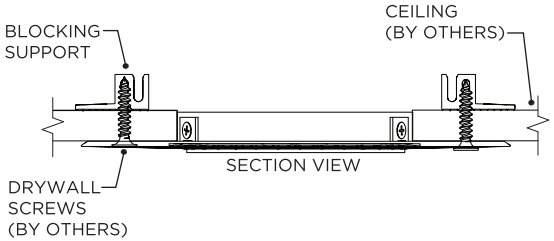

## **NC/IC -** NEW CONSTRUCTION HOUSING (FOR NEW CONSTRUCTION ONLY)

**6A**

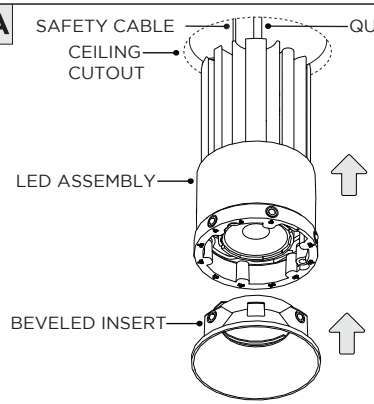


**6B**

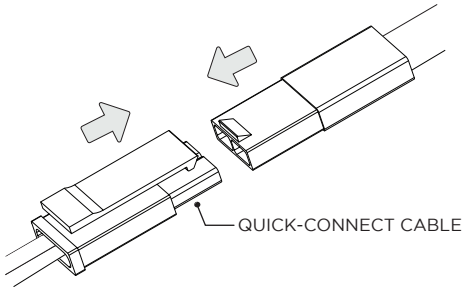


CONNECT SAFETY CABLE & QUICK-CONNECT CABLE TO LED ASSEMBLY

## LED SERVICING

**1**

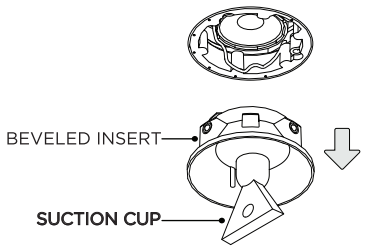


REMOVE BEVELED INSERT FROM CEILING WITH PROVIDED SUCTION CUP

**2**

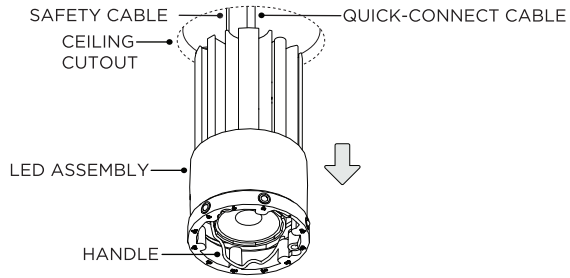


REMOVE LED ASSEMBLY FROM CEILING BY PULLING ON HANDLE

**2A**

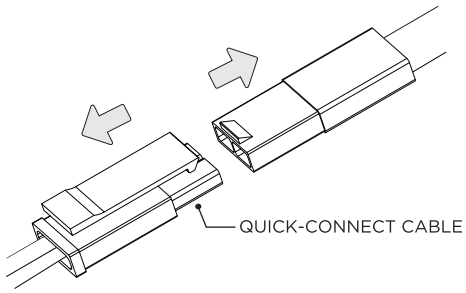


DISCONNECT SAFETY CABLE & QUICK-CONNECT CABLE FROM LED ASSEMBLY

**3**

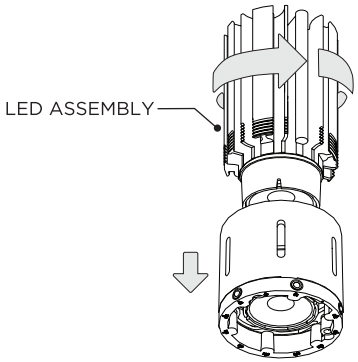


**4**

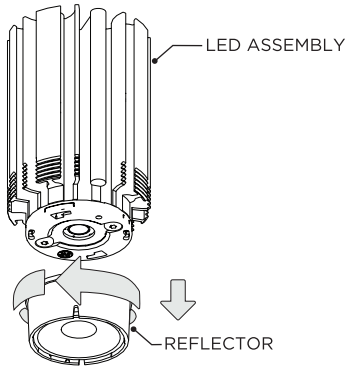


REMOVE REFLECTOR AND REPLACE LED ASSEMBLY

## DRIVER SERVICING

**1** **RMD -** REMODEL

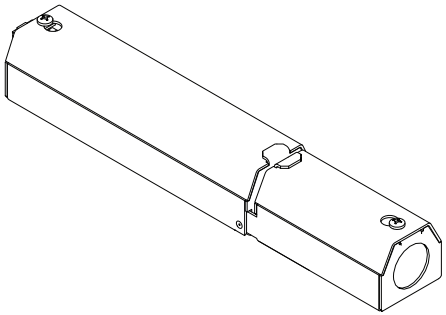

DISCONNECT POWER BEFORE SERVICING

**2**

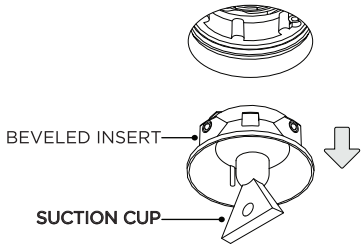


REMOVE BEVELED INSERT FROM CEILING WITH PROVIDED SUCTION CUP

**3**

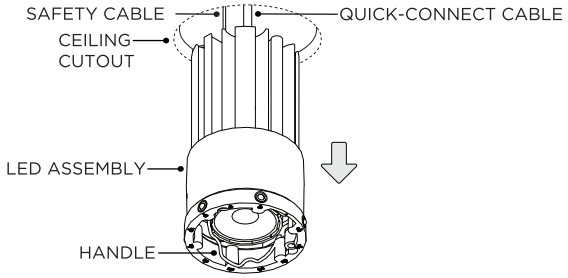


REMOVE LED ASSEMBLY FROM CEILING BY PULLING ON HANDLE

**3A**

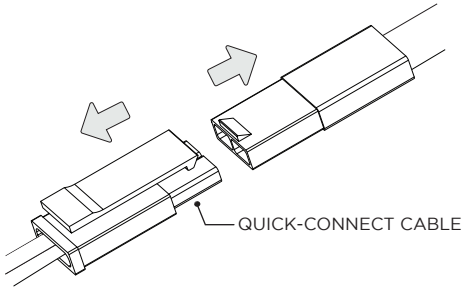


DISCONNECT SAFETY CABLE & QUICK-CONNECT CABLE FROM LED ASSEMBLY

**4**

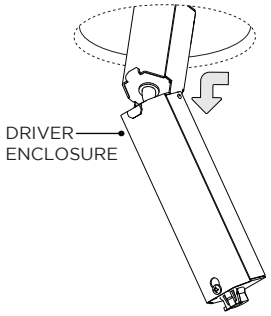


**5**

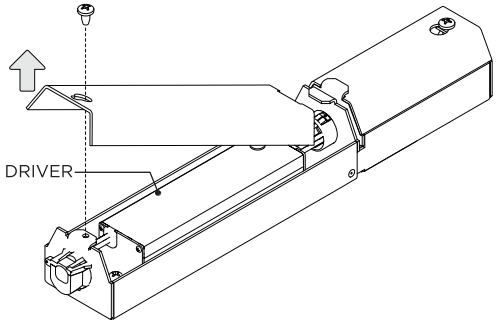

## DRIVER SERVICING

### **NCF -** NEW CONSTRUCTION FRAME

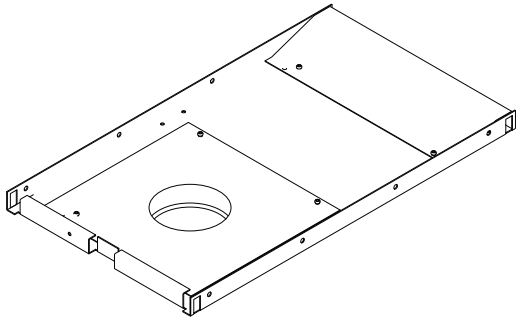

DISCONNECT POWER BEFORE SERVICING

### 2

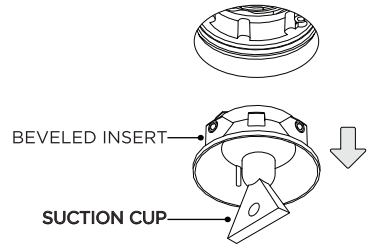


REMOVE BEVELED INSERT FROM CEILING WITH PROVIDED SUCTION CUP

### 3

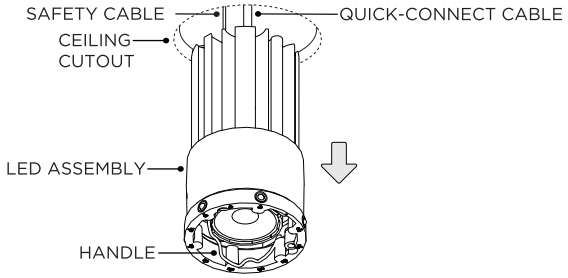


REMOVE LED ASSEMBLY FROM CEILING BY PULLING ON HANDLE

### 3A

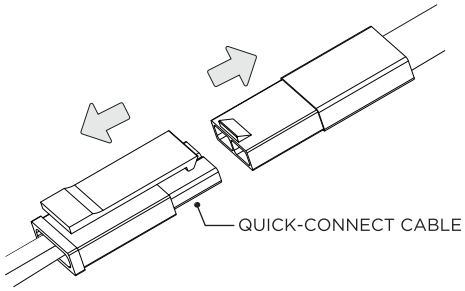


DISCONNECT SAFETY CABLE & QUICK-CONNECT CABLE FROM LED ASSEMBLY

### 4

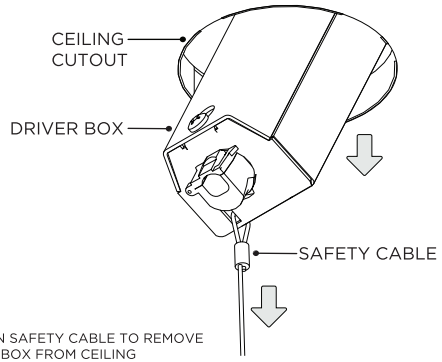


PULL ON SAFETY CABLE TO REMOVE DRIVER BOX FROM CEILING

### 5

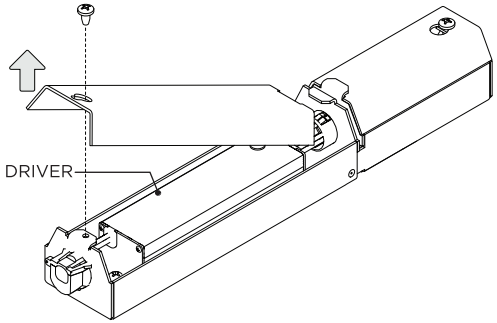

## DRIVER SERVICING

### **NC -** NEW CONSTRUCTION HOUSING

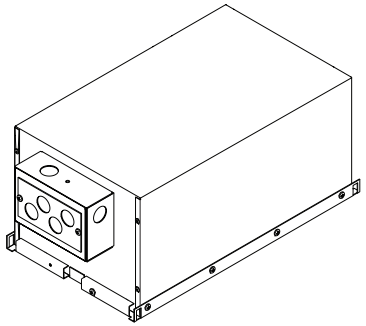

DISCONNECT POWER BEFORE SERVICING

### 2

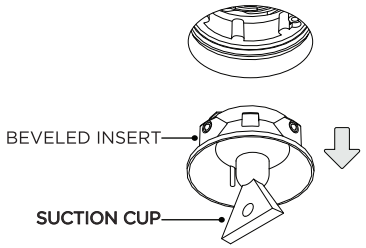


REMOVE BEVELED INSERT FROM CEILING WITH PROVIDED SUCTION CUP

### 3

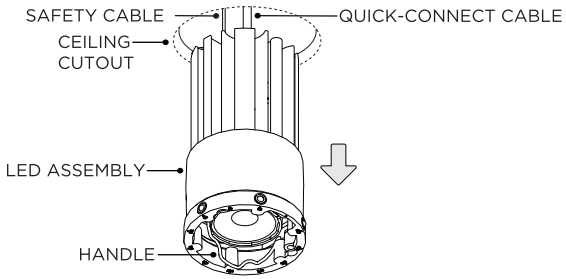


REMOVE LED ASSEMBLY FROM CEILING BY PULLING ON HANDLE

### 3A

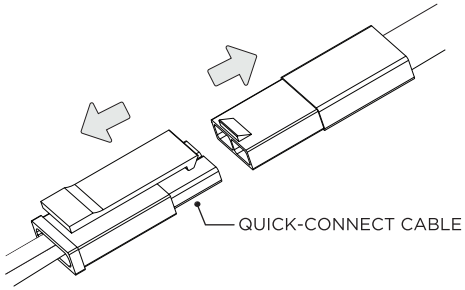


DISCONNECT SAFETY CABLE & QUICK-CONNECT CABLE FROM LED ASSEMBLY

### 4

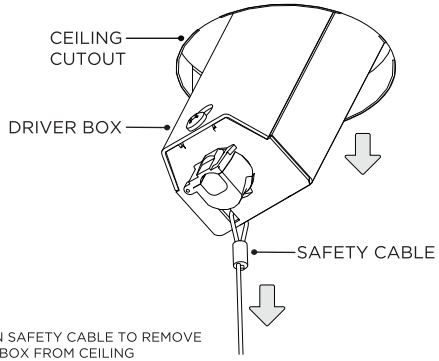


PULL ON SAFETY CABLE TO REMOVE DRIVER BOX FROM CEILING

### 4A

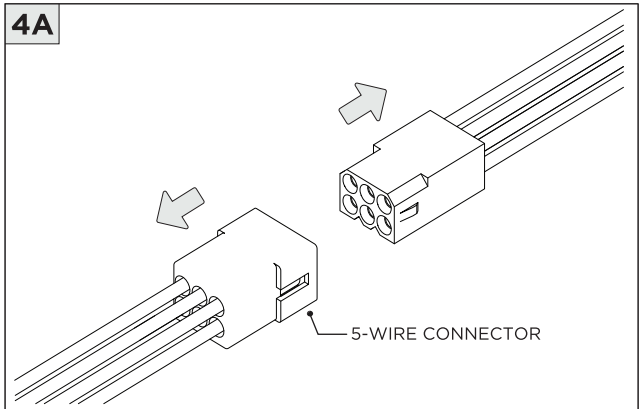


DISCONNECT 5-WIRE CONNECTOR
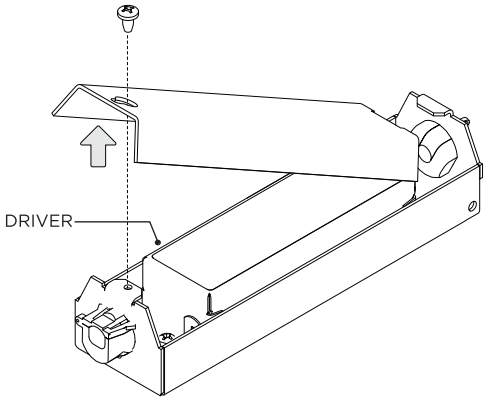
### 5