2” SQUARE FIXED DOWNLIGHT

TRIMLESS

ⓘ THE IMAGES SHOWN ARE FOR ILLUSTRATION PURPOSES ONLY AND MAY NOT BE AN EXACT REPRESENTATION OF THE PRODUCT

INCLUDED COMPONENTS

NCF - NEW CONSTRUCTION FRAME (FOR NEW CONSTRUCTION ONLY)

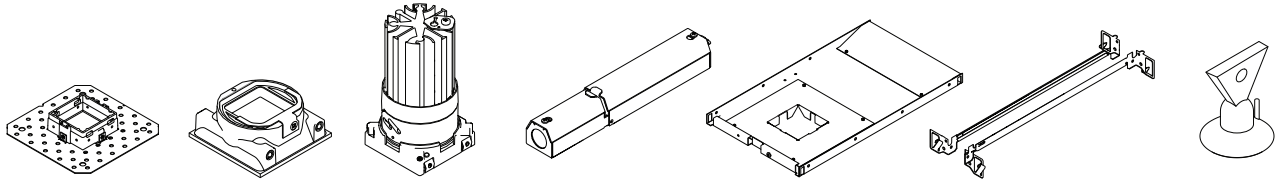

MUDDING FLANGE | BEVELED INSERT | LED ASSEMBLY | DRIVER ENCLOSURE | NEW CONSTRUCTION FRAME | BAR HANGERS | SUCTION CUP

NC - NEW CONSTRUCTION HOUSING (FOR NEW CONSTRUCTION ONLY)

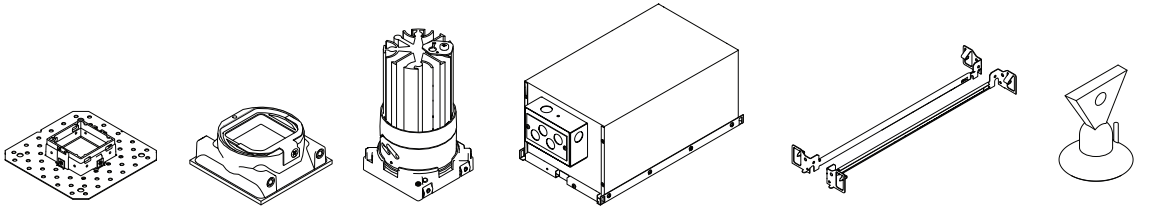

MUDDING FLANGE | BEVELED INSERT | LED ASSEMBLY | NEW CONSTRUCTION HOUSING | BAR HANGERS | SUCTION CUP

RMD - REMODEL

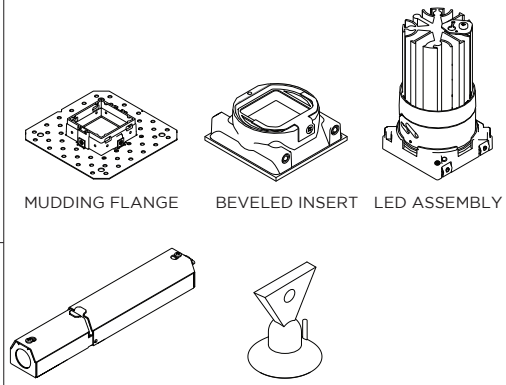

MUDDING FLANGE | BEVELED INSERT | LED ASSEMBLY | DRIVER ENCLOSURE | SUCTION CUP

INSTRUCTION KEY	INFORMATION
⚠ ADDITIONAL	INSTALLATION SHOULD ONLY BE PERFORMED BY A CERTIFIED ELECTRICIAN
ⓘ ATTENTION	REFER TO LOCAL/NATIONAL CODES FOR PROPER INSTALLATION
POWER ON	FAILURE TO FOLLOW INSTALLATION INSTRUCTION MAY VOID THE WARRANTY
POWER OFF	DO NOT TOUCH LEDS. LEDS MUST BE PROTECTED FROM MECHANICAL STRESS OR DEBRIS
	TURN OFF POWER DURING INSTALLATION OR SERVICING

3G LIGHTING

2" SQUARE FIXED DOWNLIGHT
TRIMLESS

INSTALLATION INSTRUCTIONS

RMD - REMODEL

1

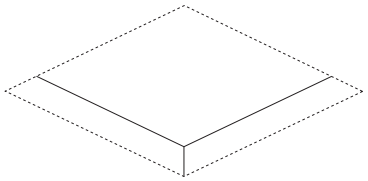

FIXTURE TYPE	CEILING HOLE SIZE
DL20SF	2.625" x 2.625"

2

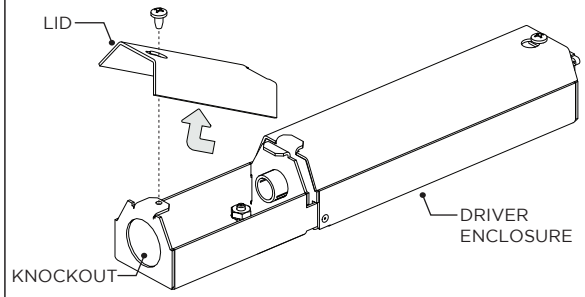

REMOVE LID AND KNOCKOUT FROM DRIVER ENCLOSURE

3

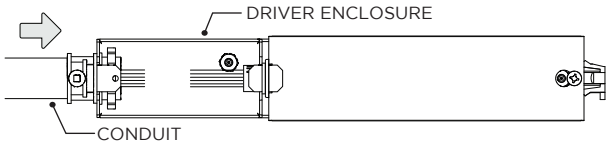

WIRING LEGEND

BLACK	HOT/LINE
WHITE	NEUTRAL
GREEN	GROUND
ORANGE	(DIM-)
PURPLE	(DIM+)

CONNECT CONDUIT TO DRIVER ENCLOSURE AND MAKE WIRING CONNECTIONS

4

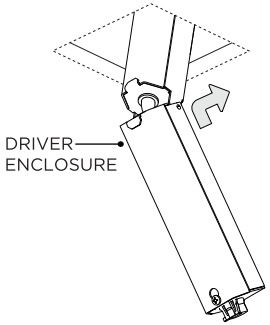

SECURE LID ONTO DRIVER ENCLOSURE AND INSERT INTO CEILING

5

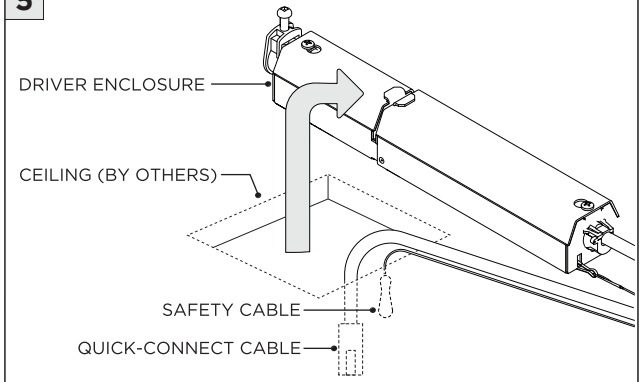

PLACE DRIVER ENCLOSURE ABOVE CEILING

6A

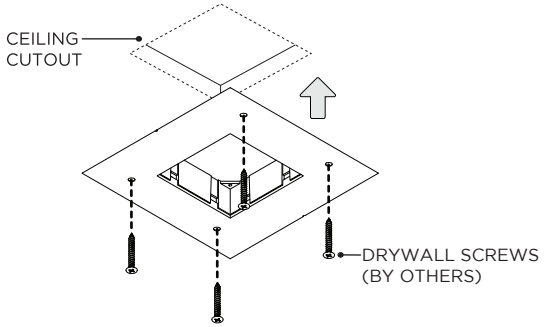

SECURE MUDDING FLANGE TO CEILING

6B

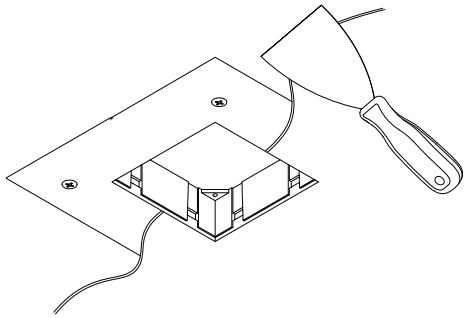

APPLY MUDDING COMPOUND (BY OTHERS) TO CEILING

7A

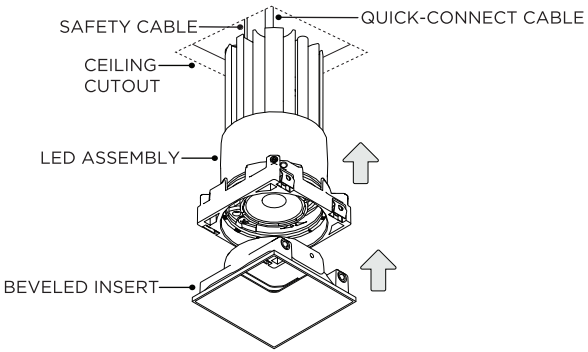

7B

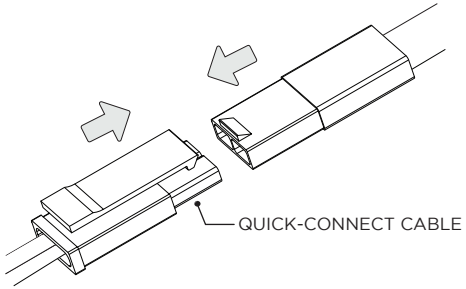

CONNECT SAFETY CABLE & QUICK-CONNECT CABLE TO LED ASSEMBLY

RMD - REMODEL WITH REMOTE DRIVER ENCLOSURE

1 REMOTE DRIVER WIRING

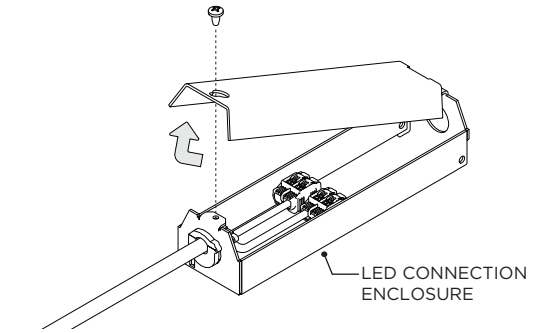

FOR REMOTE EMR DRIVER BOX, MAKE WIRED CONNECTIONS INSIDE PROVIDED LED CONNECTION ENCLOSURE

2

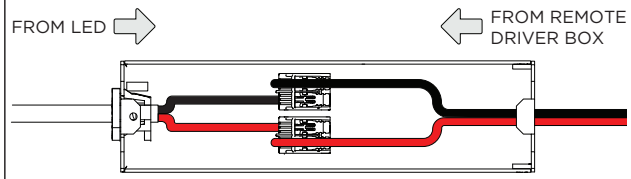

MAKE WIRING CONNECTIONS

NCF - NEW CONSTRUCTION FRAME (FOR NEW CONSTRUCTION ONLY)

1

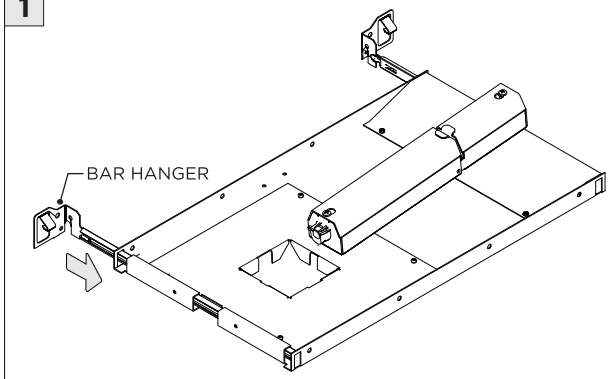

1A

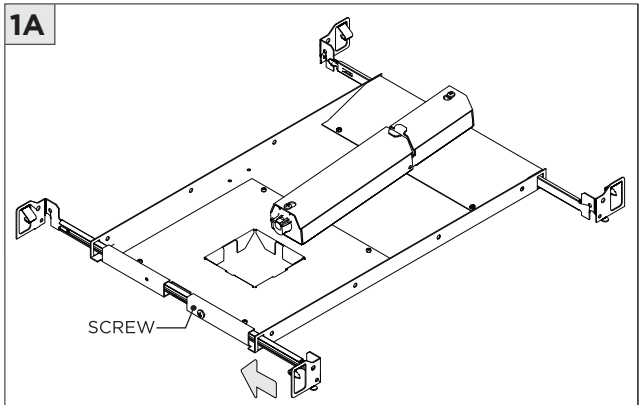

SECURE BAR HANGERS IN PLACE WITH SCREW

2

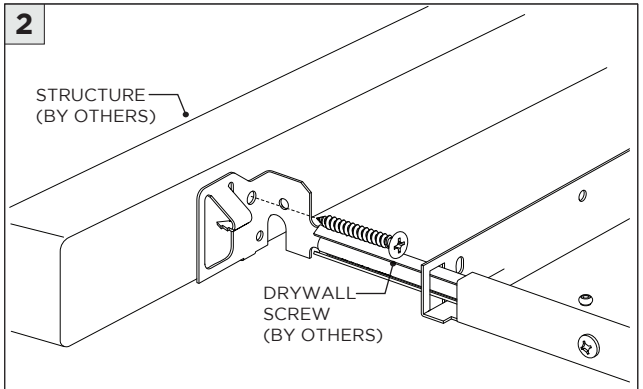

BAR HANGERS HAVE 14" to 26" EXTENSION

3

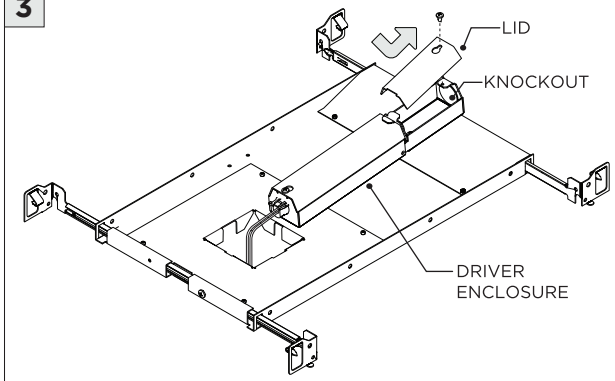

REMOVE LID AND KNOCKOUT FROM DRIVER ENCLOSURE

4

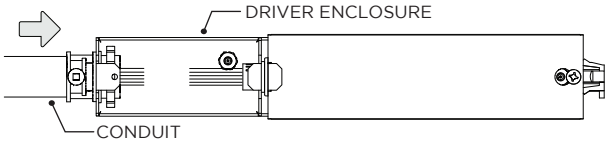

WIRING LEGEND

BLACK	HOT/LINE
WHITE	NEUTRAL
GREEN	GROUND
ORANGE	(DIM-)
PURPLE	(DIM+)

CONNECT CONDUIT TO DRIVER ENCLOSURE AND MAKE WIRING CONNECTIONS

5

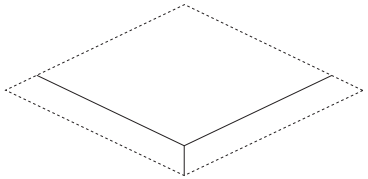

FIXTURE TYPE	CEILING HOLE SIZE
DL20SF	2.625" x 2.625"

INSTALL CEILING BELOW FIXTURE

6A

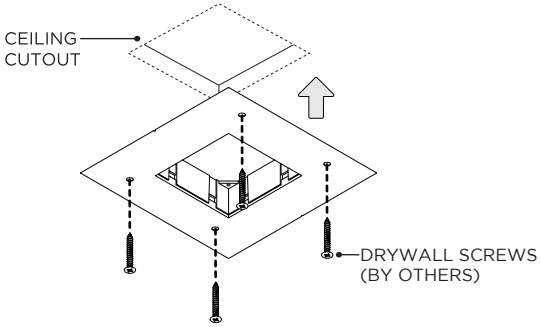

SECURE MUDDING FLANGE TO CEILING

6B

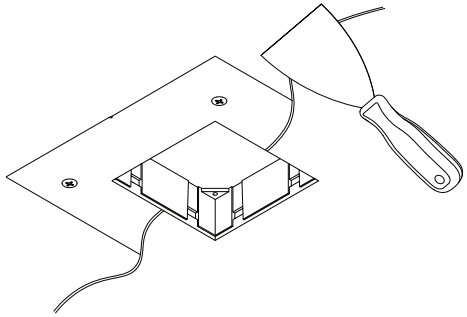

APPLY MUDDING COMPOUND (BY OTHERS) TO CEILING

6C

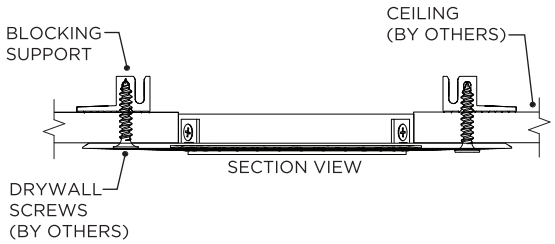

NCF - NEW CONSTRUCTION FRAME (FOR NEW CONSTRUCTION ONLY)

7A

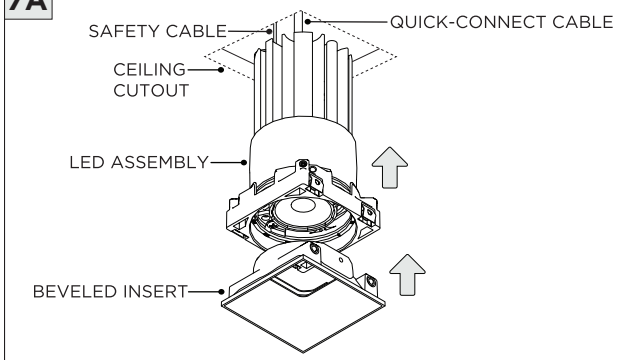

7B

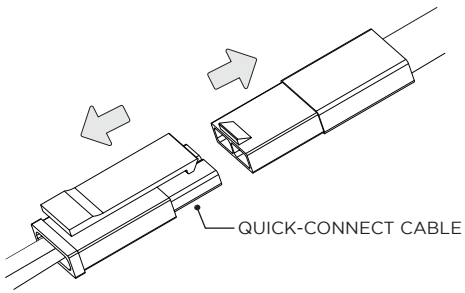

CONNECT SAFETY CABLE & QUICK-CONNECT CABLE TO LED ASSEMBLY

NC/IC - NEW CONSTRUCTION HOUSING (FOR NEW CONSTRUCTION ONLY)

1

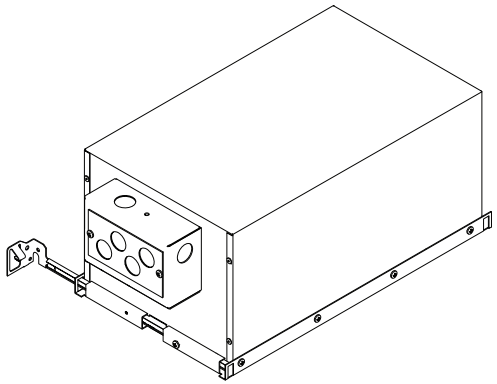

1A

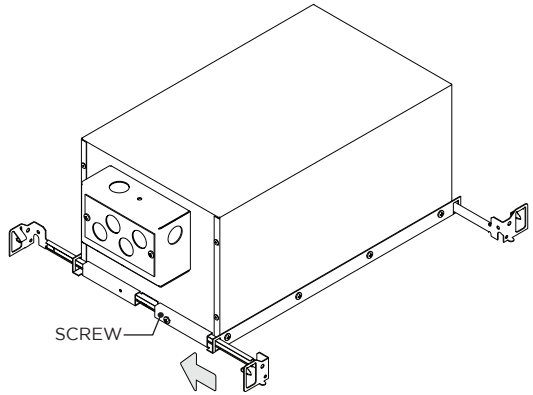

SECURE BAR HANGERS IN PLACE WITH SCREW

2

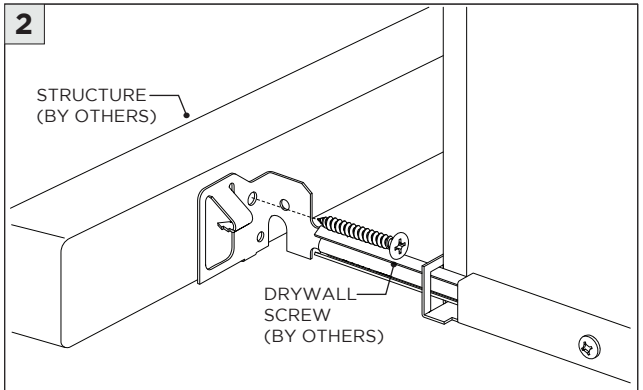

BAR HANGERS HAVE 14" to 26" EXTENSION

3

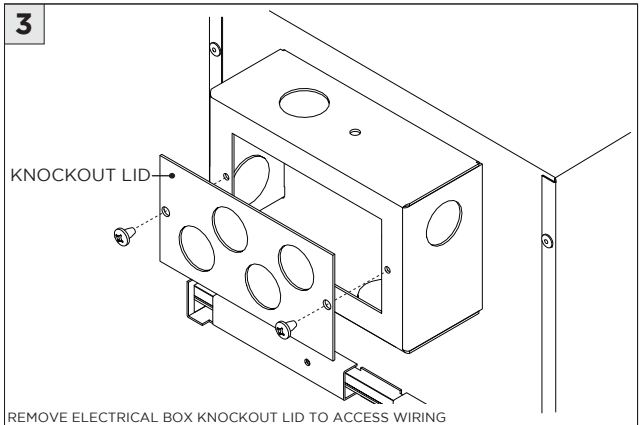

REMOVE ELECTRICAL BOX KNOCKOUT LID TO ACCESS WIRING

3A

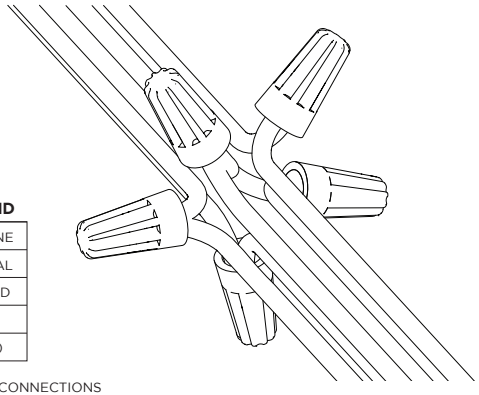

WIRING LEGEND

BLACK	HOT/LINE
WHITE	NEUTRAL
GREEN	GROUND
ORANGE	(DIM-)
PURPLE	(DIM+)

MAKE WIRING CONNECTIONS

4

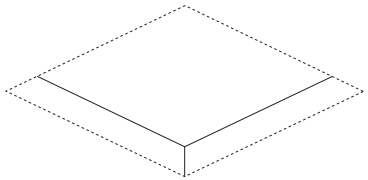

FIXTURE TYPE	CEILING HOLE SIZE
DL20SF	2.625" x 2.625"

INSTALL CEILING BELOW FIXTURE

5A

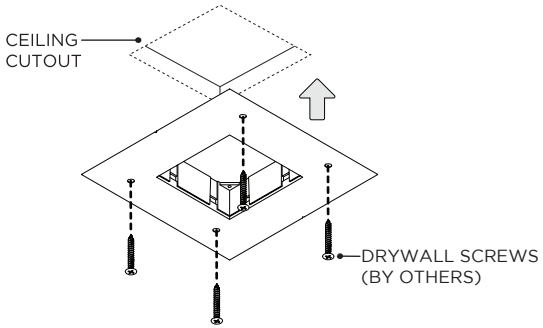

SECURE MUDDING FLANGE TO CEILING

5B

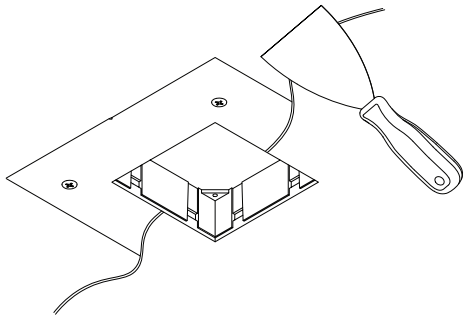

APPLY MUDDING COMPOUND (BY OTHERS) TO CEILING

5C

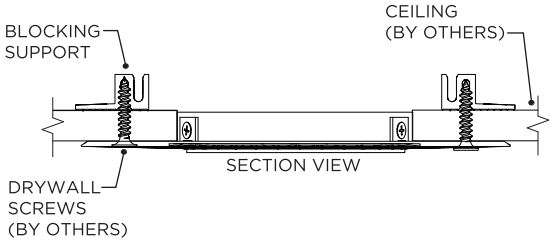

NC/IC - NEW CONSTRUCTION HOUSING (FOR NEW CONSTRUCTION ONLY)

6A

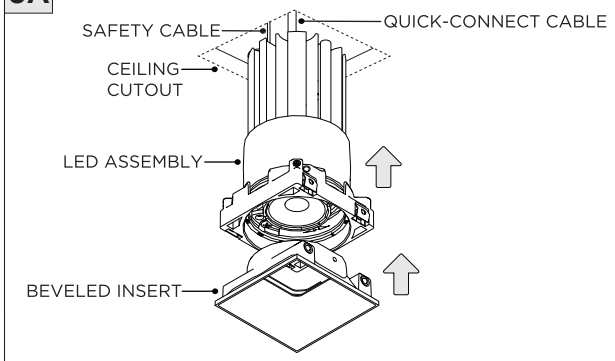

6B

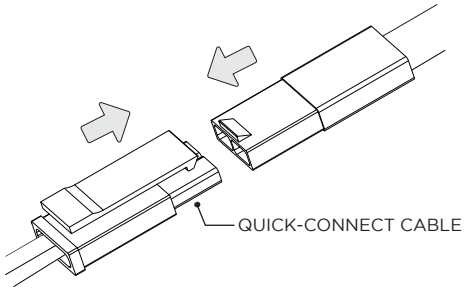

CONNECT SAFETY CABLE & QUICK-CONNECT CABLE TO LED ASSEMBLY

LED SERVICING

1

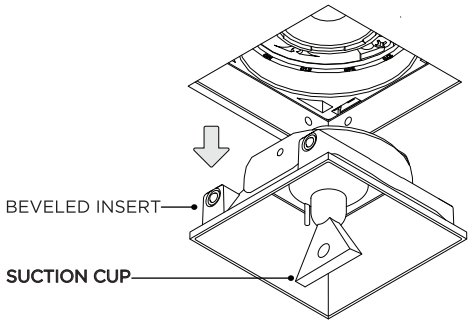

REMOVE BEVELED INSERT FROM CEILING WITH PROVIDED SUCTION CUP

2

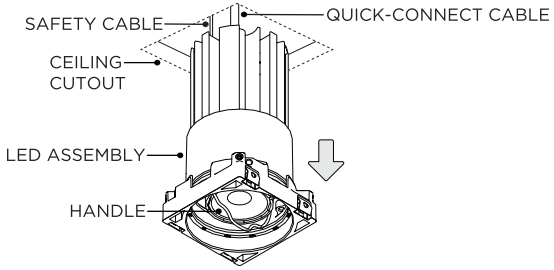

REMOVE LED ASSEMBLY FROM CEILING BY PULLING ON HANDLE

2A

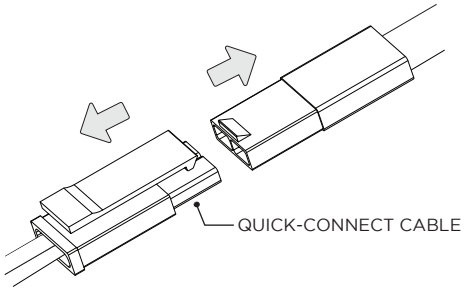

DISCONNECT SAFETY CABLE & QUICK-CONNECT CABLE FROM LED ASSEMBLY

3

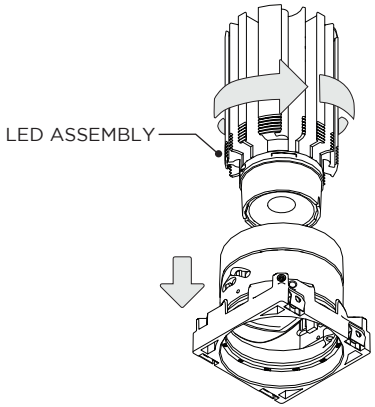

4

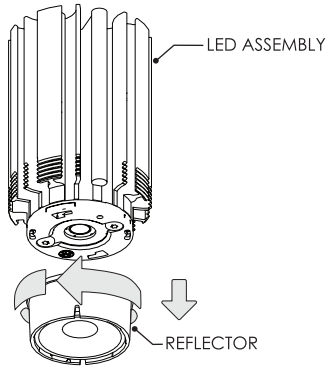

REMOVE REFLECTOR AND REPLACE LED ASSEMBLY

DRIVER SERVICING

1 **RMD -** REMODEL

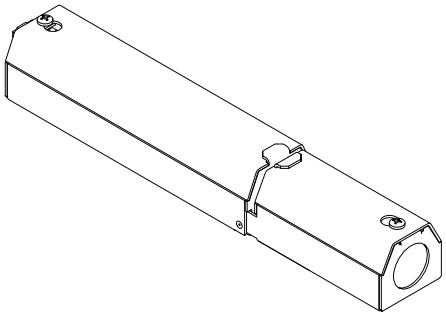

DISCONNECT POWER BEFORE SERVICING

2

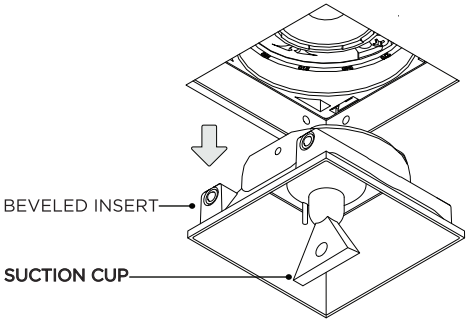

REMOVE BEVELED INSERT FROM CEILING WITH PROVIDED SUCTION CUP

3

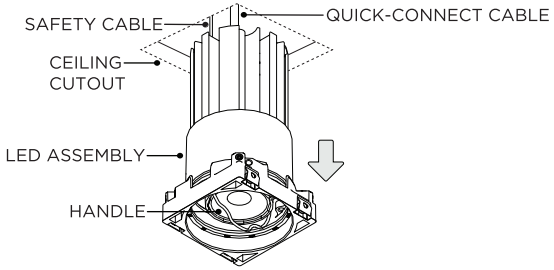

REMOVE LED ASSEMBLY FROM CEILING BY PULLING ON HANDLE

3A

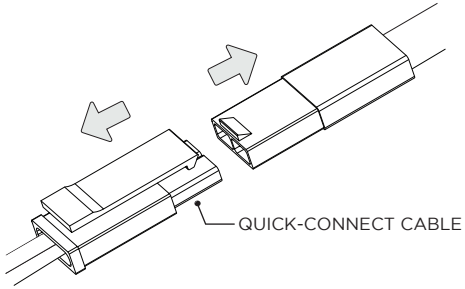

DISCONNECT SAFETY CABLE & QUICK-CONNECT CABLE FROM LED ASSEMBLY

4

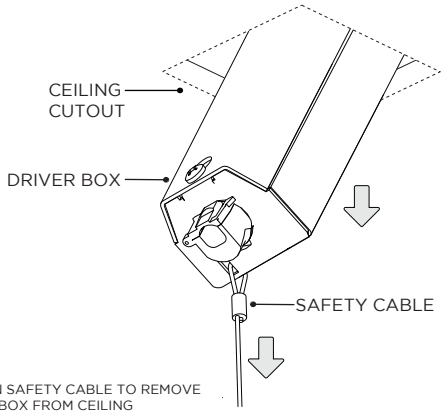

PULL ON SAFETY CABLE TO REMOVE DRIVER BOX FROM CEILING

5

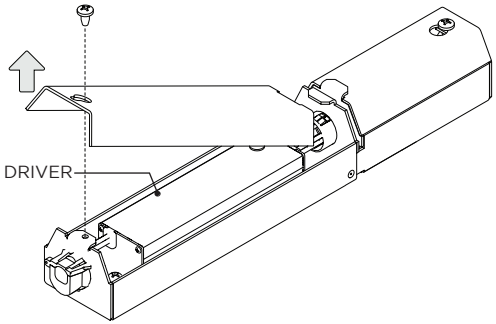

DRIVER SERVICING

1 **NCF -** NEW CONSTRUCTION FRAME

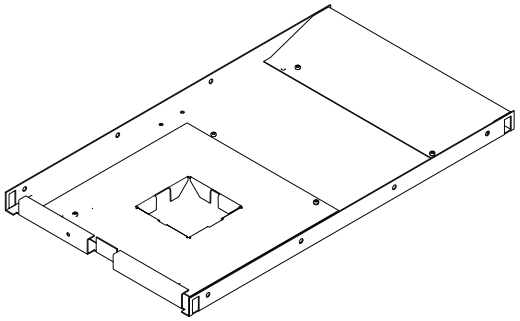

DISCONNECT POWER BEFORE SERVICING

2

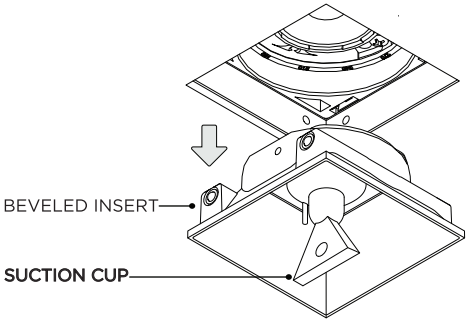

REMOVE BEVELED INSERT FROM CEILING WITH PROVIDED SUCTION CUP

3

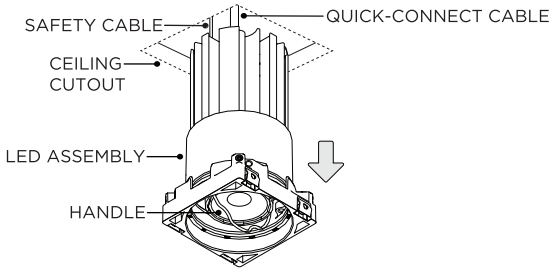

REMOVE LED ASSEMBLY FROM CEILING BY PULLING ON HANDLE

3A

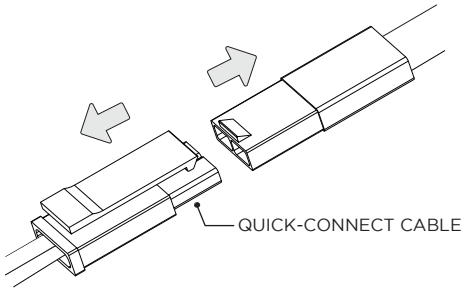

DISCONNECT SAFETY CABLE & QUICK-CONNECT CABLE FROM LED ASSEMBLY

4

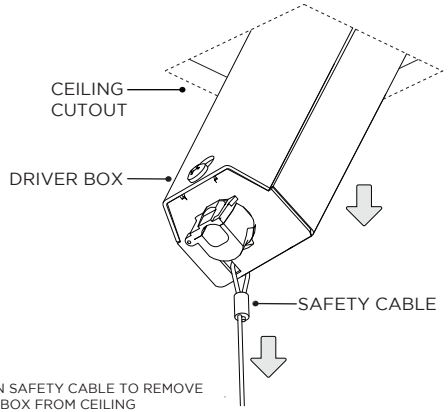

PULL ON SAFETY CABLE TO REMOVE DRIVER BOX FROM CEILING

5

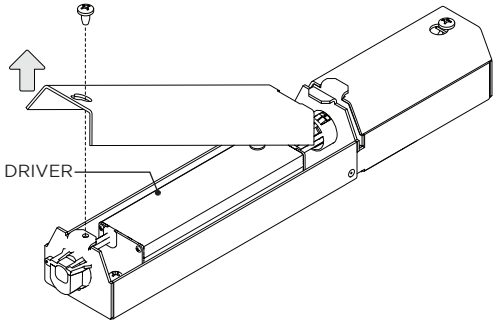

DRIVER SERVICING

1 NC - NEW CONSTRUCTION HOUSING

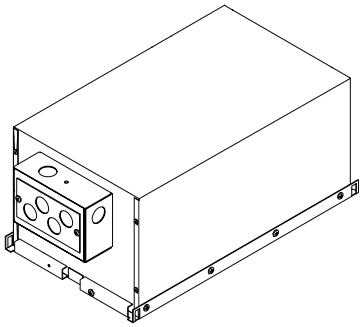

DISCONNECT POWER BEFORE SERVICING

2

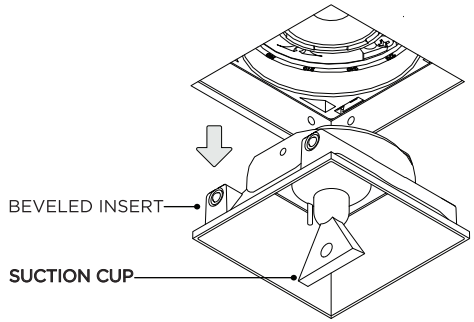

REMOVE BEVELED INSERT FROM CEILING WITH PROVIDED SUCTION CUP

3

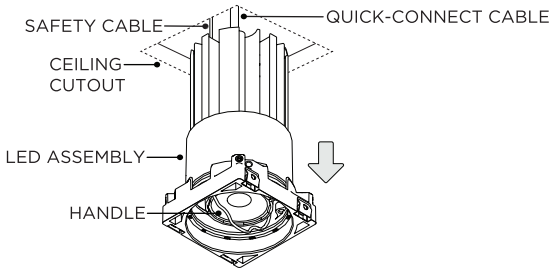

REMOVE LED ASSEMBLY FROM CEILING BY PULLING ON HANDLE

3A

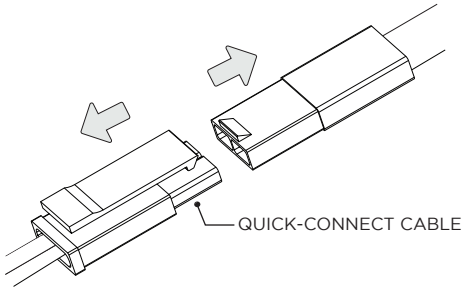

DISCONNECT SAFETY CABLE & QUICK-CONNECT CABLE FROM LED ASSEMBLY

4

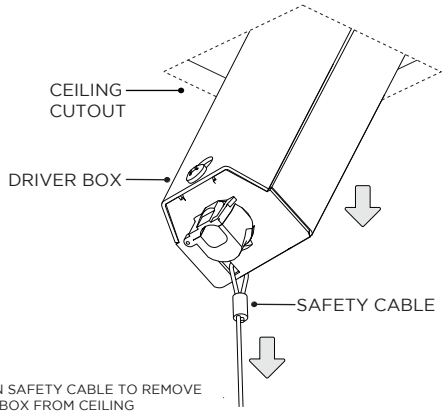

PULL ON SAFETY CABLE TO REMOVE DRIVER BOX FROM CEILING

4A

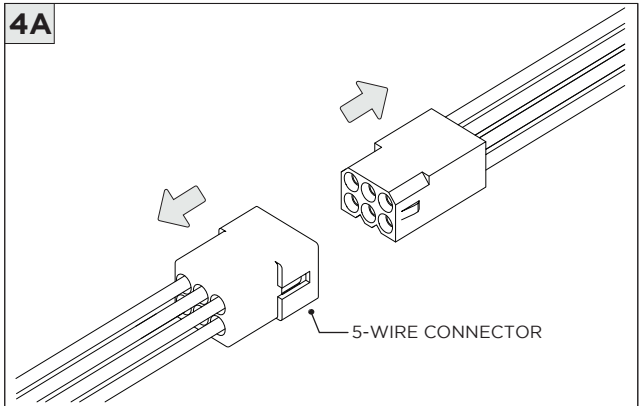

DISCONNECT 5-WIRE CONNECTOR
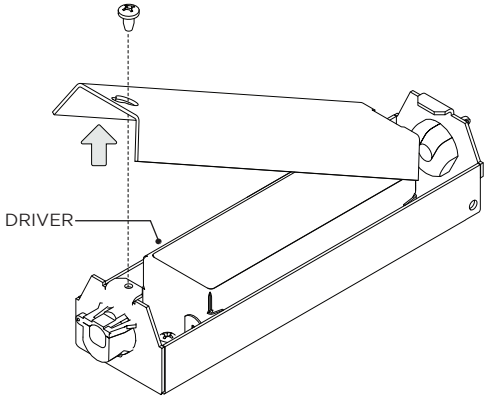
5