3G-58RMSL, 3G-48RMSL
5.8” 4.8” CURVED RECESSED SLOT

FLANGELESS/TRIM FLANGE

⚠ FOR **NEW CONSTRUCTION** INSTALLATION ONLY

ⓘ THE IMAGES SHOWN ARE FOR ILLUSTRATION PURPOSES ONLY AND MAY NOT BE AN EXACT REPRESENTATION OF THE PRODUCT

FIXTURE TYPES	INCLUDED COMPONENTS
58RMSL PROFILE 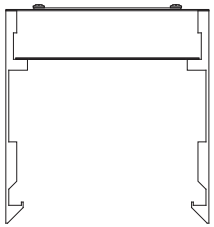 48RMSL PROFILE 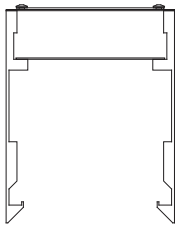	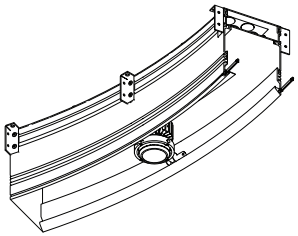 STARTER 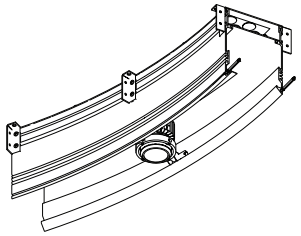 JOINER 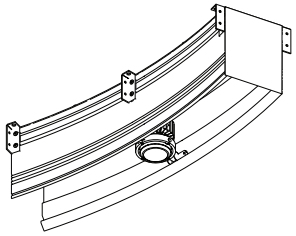 ENDER

INSTRUCTION KEY	INFORMATION
⚠ ADDITIONAL ⓘ ATTENTION POWER ON POWER OFF	INSTALLATION SHOULD ONLY BE PERFORMED BY A CERTIFIED ELECTRICIAN REFER TO LOCAL/NATIONAL CODES FOR PROPER INSTALLATION FAILURE TO FOLLOW INSTALLATION INSTRUCTION MAY VOID THE WARRANTY DO NOT TOUCH LEDS. LEDS MUST BE PROTECTED FROM MECHANICAL STRESS OR DEBRIS TURN OFF POWER DURING INSTALLATION OR SERVICING

OVERVIEW

FLANGELESS - FX

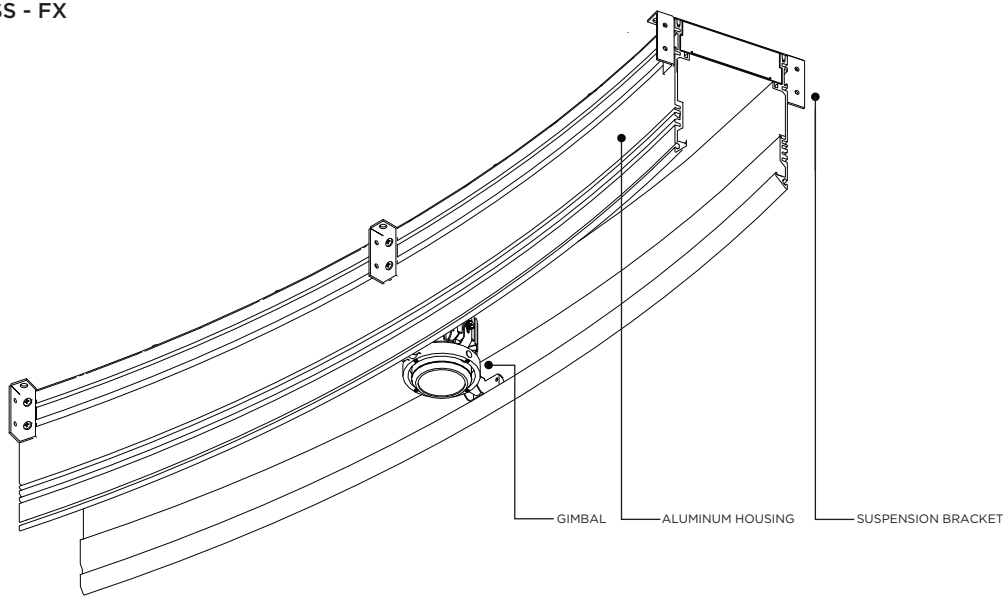

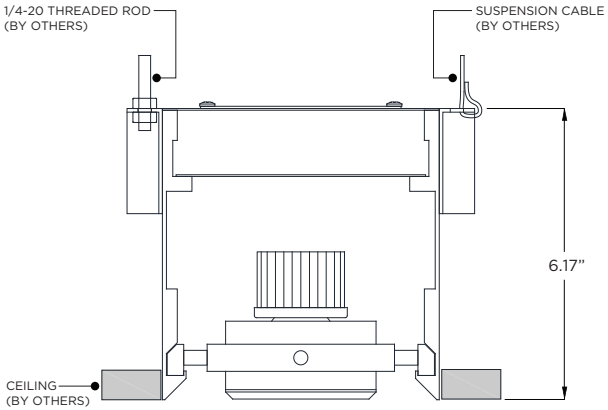

FLANGELESS - FX - CEILING CUT-OUT DIMENSIONS

FIXTURE TYPE	WIDTH	LENGTH
3G-48RMSL	4.95”	LENGTH + 0.05”
3G-58RMSL	5.95”	LENGTH + 0.05”

WHITE TRIM FLANGE -WT

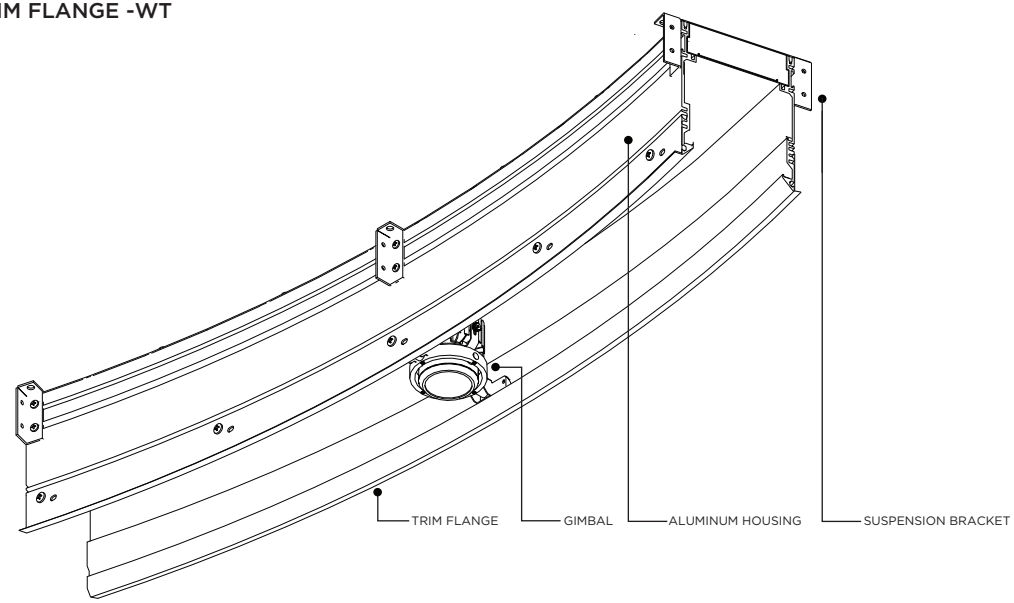

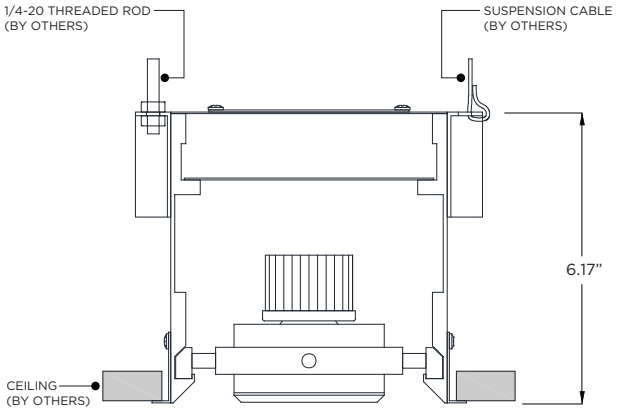

TRIM FLANGE - WT - CEILING CUT-OUT DIMENSIONS

FIXTURE TYPE	WIDTH	LENGTH
3G-48RMSL	4.85”	LENGTH + 0.40”
3G-58RMSL	6.30”	LENGTH + 0.40”

THREADED ROD LOCATION

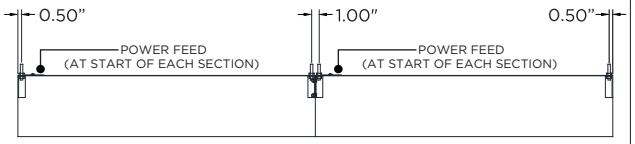

IDENTIFICATION AND PREPARATION

ID LABEL

SECTION: **01 OF 03**
TYPE: **XX XX** CO-0000

ORDER TYPE ORDER NUMBER SECTION ID NUMBER

IDENTIFY FIXTURE SECTIONS BY THE ID LABELS FOUND ON THE BOX INSIDE THE SECTIONS

ID LABEL

SECTION: **01 OF 03**
TYPE: **XX XX** CO-0000

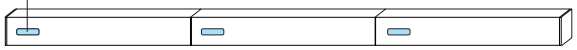

STARTER JOINER ENDER

3G LIGHTING

3G-58RMSL, 3G-48RMSL
5.8”, 4.8” CURVED RECESSED SLOT
FLANGELESS/TRIM FLANGE

INSTALLATION INSTRUCTIONS

1

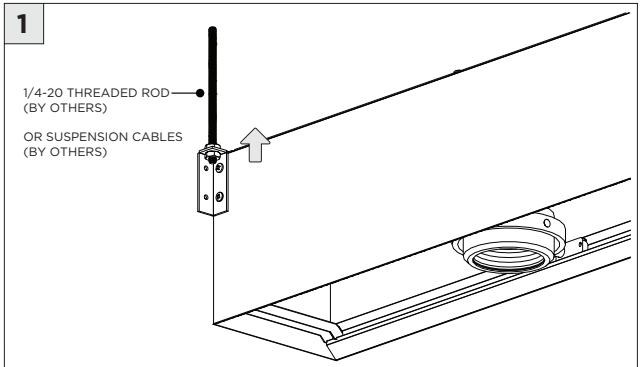

SECURE STARTER SECTION TO CEILING WITH
THREADED RODS (BY OTHERS)
OR SUSPENSION CABLES (BY OTHERS)

2

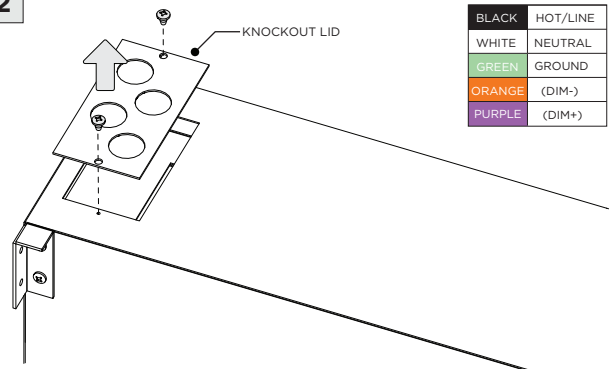

WIRING LEGEND

BLACK	HOT/LINE
WHITE	NEUTRAL
GREEN	GROUND
ORANGE	(DIM-)
PURPLE	(DIM+)

REMOVE KNOCKOUT LID AND MAKE
WIRING CONNECTIONS INSIDE FIXTURE

3

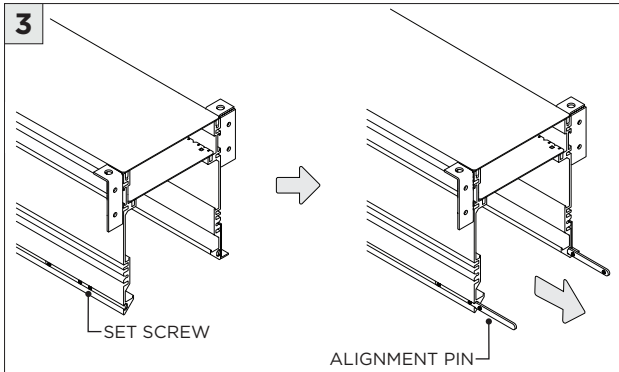

LOOSEN SET SCREW TO PULL OUT ALIGNMENT PIN FROM HOUSING
DO NOT REMOVE ENTIRELY

4

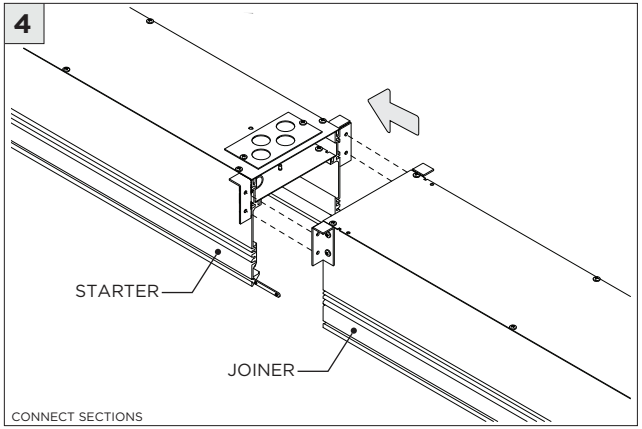

CONNECT SECTIONS

5

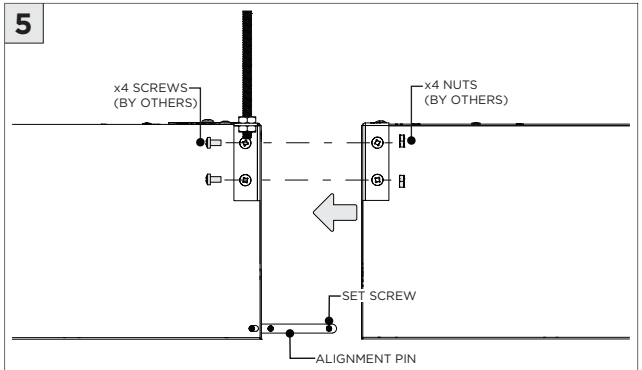

ALIGN SECTIONS WITH ALIGNMENT PINS
SECURE WITH **8-32** SCREWS AND NUTS (BY OTHERS
TIGHTEN ALIGNMENT PIN SET SCREWS

6

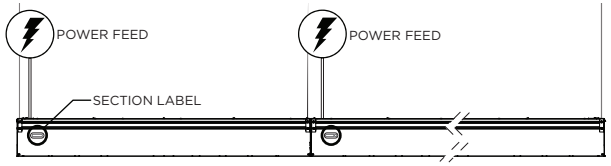

STARTER → JOINER X → JOINER X → ENDER

ARRANGE SECTIONS BY CORRECTLY ORDERING LABELS

EACH SECTION MUST BE INDIVIDUALLY POWERED

7

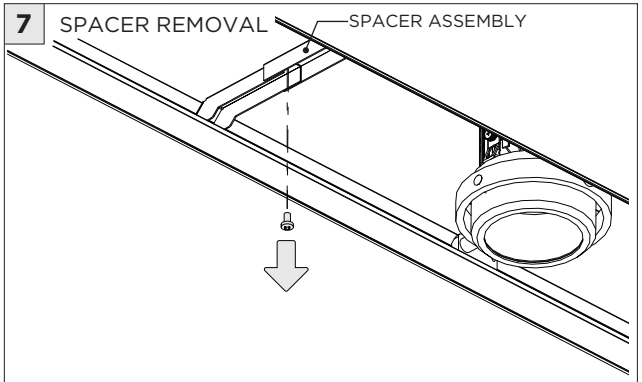

DO NOT TWIST SPACER TO AVOID SCRATCHING PAINT

8

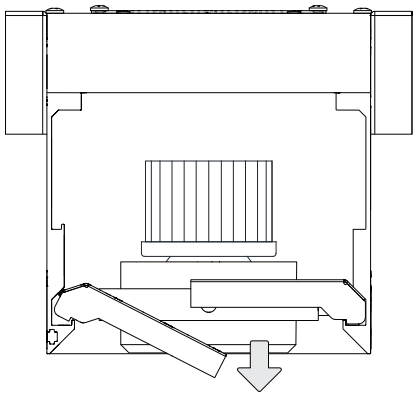

9

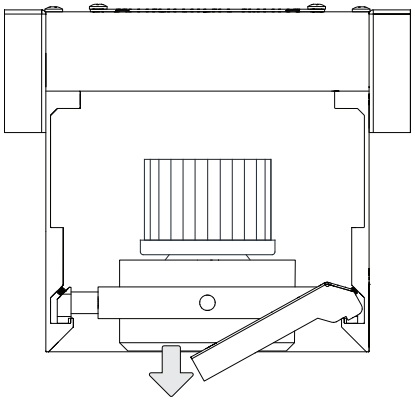

LED SERVICING - 48/58RMSL

1

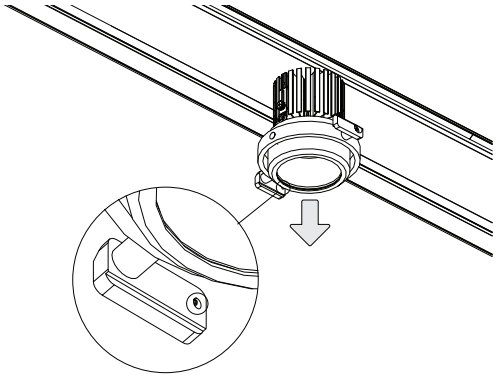

2

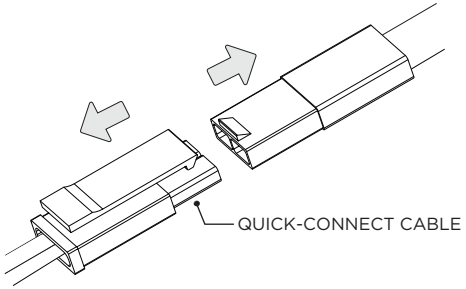

DISCONNECT QUICK-CONNECT CABLE FROM LED ASSEMBLY

3

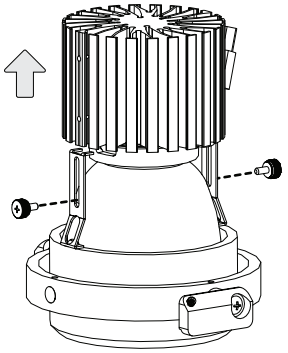

4

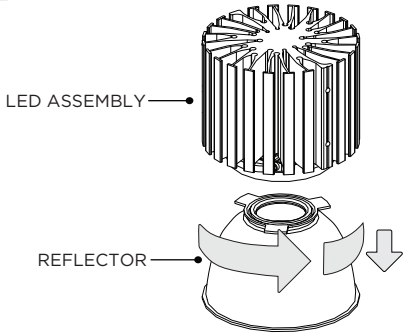

TWIST REFLECTOR TO REMOVE FROM LED ASSEMBLY

DRIVER SERVICING - 48/58RMSL

1

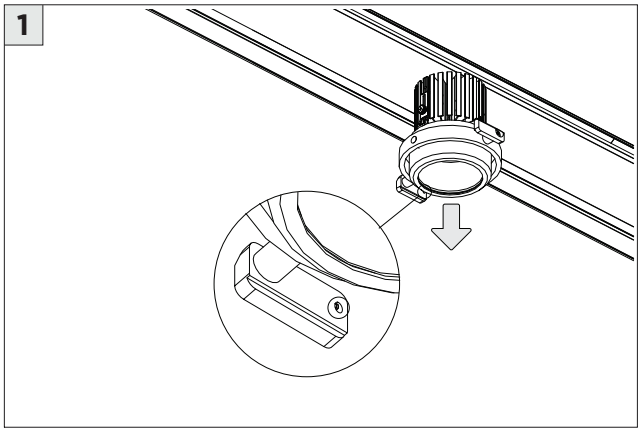

2

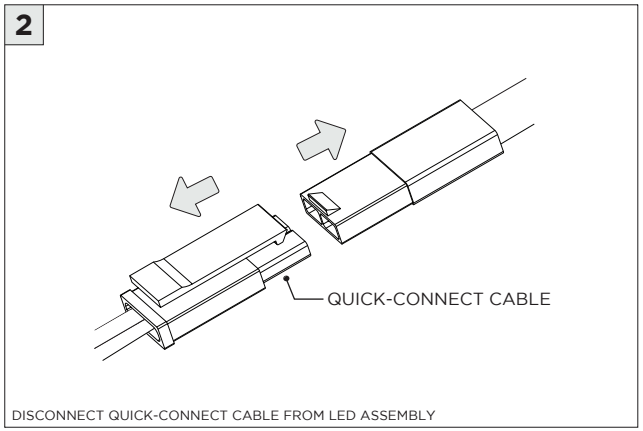

DISCONNECT QUICK-CONNECT CABLE FROM LED ASSEMBLY

3

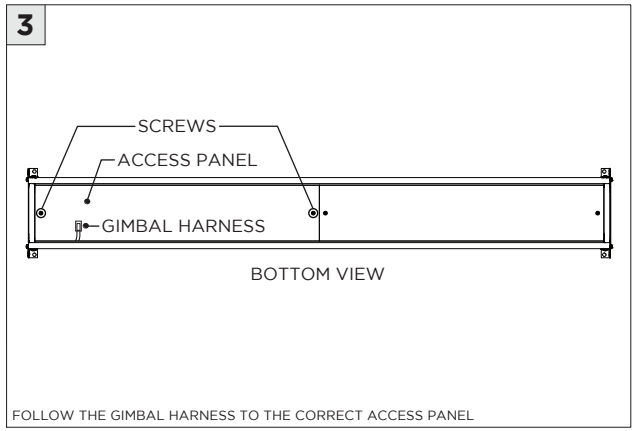

FOLLOW THE GIMBAL HARNESS TO THE CORRECT ACCESS PANEL

4

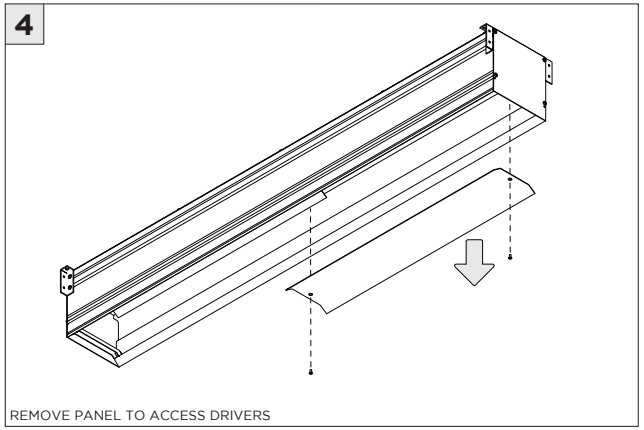

REMOVE PANEL TO ACCESS DRIVERS

5

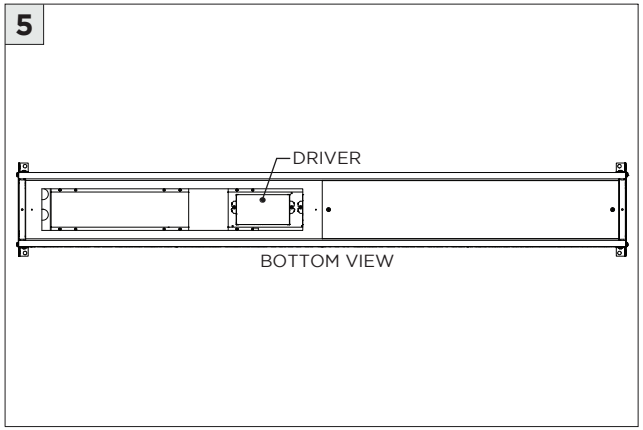

ⓘ THE IMAGES SHOWN ARE FOR ILLUSTRATION PURPOSES ONLY AND MAY NOT BE AN EXACT REPRESENTATION OF THE PRODUCT

OPTIONS

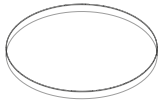

SOFTENING/LINEAR SPREAD LENS

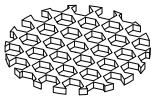

BLACK HEXCELL LOUVER

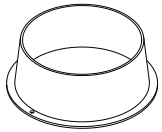

SNOOT

ⓘ INSTALLATION PROCESS IS IDENTICAL FOR M7, M5 & M3 GIMBALS

1

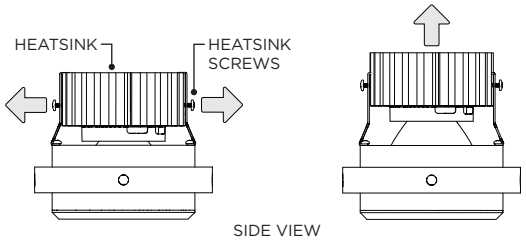

LOOSEN HEATSINK SCREWS AND RAISE HEATSINK TO ALLOW FOR OPTICAL ACCESSORY CLEARANCE

2

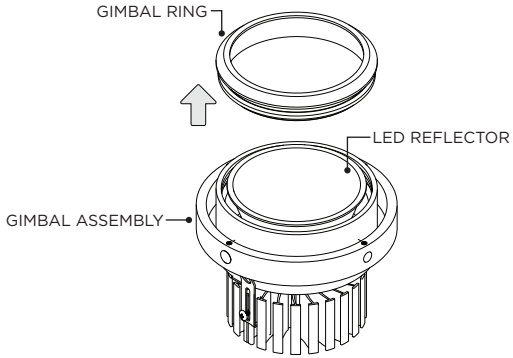

TWIST OFF GIMBAL RING FROM GIMBAL ASSEMBLY

3

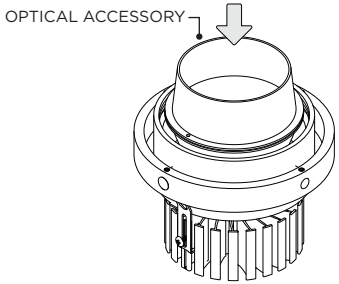

PLACE OPTICAL ACCESSORY ON TOP OF LED REFLECTOR

4

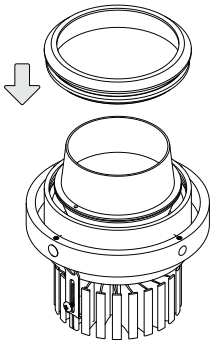

TWIST ON GIMBAL RING TO LOCK IN PLACE

5

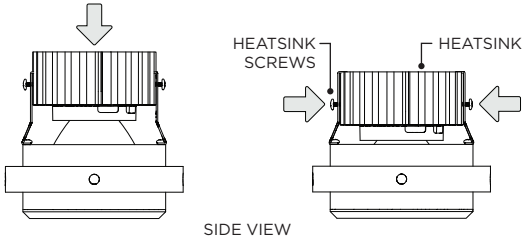

LOWER HEATSINK AND TIGHTEN HEATSINK SCREWS